Yorke Peninsula Council

NOTICE OF MEETING

Notice is hereby given that the next ordinary meeting of Council
will be held on Wednesday 10th May 2017,
in the Council Chambers,
57 Main Street, Minlaton commencing at 5.30pm

Andrew Cameron
CHIEF EXECUTIVE OFFICER

A G E N D A

ITEM 1 YORKE PENINSULA COUNCIL

1.1 Welcome by Mayor – meeting declared opened

1.2 Opening Prayer

1.3 Present

1.4 Leave of absence
Nil

1.5 Apologies
Nil

1.6 Conflict of Interest

CONFLICT OF INTEREST

Elected Members are reminded of the requirements for disclosure by Members of direct or indirect pecuniary benefit or detriment and non-pecuniary benefit or detriment in relation to a material conflict of interest in accordance with Section 73, or an actual or perceived conflict of interest in accordance with Section 75 of the Local Government Act in items listed for consideration on the Agenda. Section 74 and 75A of the Local Government Act 1999 requires that Elected Members declare any interest and provide full and accurate details of the relevant interest to the Council. In relation to actual or perceived conflicts of interest a member has an obligation to outline how they propose to deal with the actual or perceived conflict of interest prior to consideration of that item on the Agenda.

This requirement does not apply to Ordinary Business Matters prescribed by regulation 8AAA Local Government Act (General) (Accountability and Governance) Variation Regulations 2016.

Each Member of a Council has a duty to vote at all meetings unless excepted by legislation.

The major exception being where a Member has a material conflict of interest.

1.7 Minutes of previous meeting – for confirmation
1.7.1 Council meeting held on Wednesday 12th April 2017 at 5.30pm
1.7.2 Confidential Council meeting held on Wednesday 12th April 2017 at 6.26pm

1.8 Motions on Notice
Nil

1.9 Questions on Notice
Nil

1.10 Questions without Notice

1.11 Petitions
Nil

ITEM 2	MAYOR	Page
	Mayor Monthly Report	4 - 5
ITEM 3	COUNCILLORS' REPORT	
	Nil	
ITEM 4	**INFORMATION AGENDA**	Page 6
4.1	Items for exclusion	
4.2	Receipt of Information Reports	
4.3	Chief Executive Officer	Pages
	1. CEO Activities	7
	2. Action List	8 - 13

4.4	Corporate and Community Services		Pages
	1.	Art Exhibition Working Party Minutes	14 - 20
4.5	Assets and Infrastructure Services		Pages
	1.	Construction and Maintenance Works	21 - 25
	2.	2017 LGA Roads and Works Conference	26 - 27
4.6	Development Services		Pages
	1.	Inspectorial Activity Report	28 - 29
	2.	Development Application Approvals	30 - 35
	3.	Wastewater System Application Approvals	36 - 38
ITEM 5	VISITORS TO THE MEETING		
	Black Point Community Land Revocation Proposal		
	1.	Dr John Gray	
	2.	John McFarlane	
	3.	George Kourlis	
ITEM 6	**DEBATE AGENDA**		Page 39
6.1	CHIEF EXECUTIVE OFFICER		
	Nil		
6.2	CORPORATE AND COMMUNITY SERVICES		Pages
	1.	Financial Report 30th April 2017	40 - 45
	2.	March Quarterly Budget Review	46 - 59
	3.	Declaration of Separate Rate Chinaman Wells Seawall	60 - 66
	4.	Draft Annual Business Plan	67 - 69
6.3	ASSETS AND INFRASTRUCTURE SERVICES		
	Nil		
6.4	DEVELOPMENT SERVICES		Pages
	1.	Proposed Road Process Order - Adelbridge	70 - 85
	2.	Proposed Road Process Order – St Johns	86 - 97
	3.	Proposed Expansion of Bush Camping Locations	98 - 102
	4.	Bush Camping Working Party Minutes	103 - 107
	5.	Shop Trading Hours	108 - 110
	6.	Dog Registration Fees	111 - 113
	7.	Proposal Revocation of Community Land Allotment 201	114 - 116
	8.	Proposal Revocation of Community Land Allotment 202	117 - 119
	9.	Proposal Revocation of Community Land Allotment 203	120 - 122
	10.	Proposal Revocation of Community Land Allotment 204	123 - 125
ITEM 7	GENERAL BUSINESS		
	Council has resolved that an Agenda Item “General Business” be included on the Council Agenda to enable members to raise matters of a minor nature for action by the Administration, or to call for reports.		
ITEM 8	CONFIDENTIAL AGENDA		Pages
	1.	Purchase of One Minimum 90kW Tractor Tender 165-2017	126 - 127
ITEM 9	NEXT MEETING		
	Wednesday 14th June 2017		
ITEM 10	CLOSURE		

MAYOR

IA/ITEM 2

MONTHLY REPORT MAY 2017

PURPOSE

To keep Elected Members updated on Mayoral activities during the month of April 2017.

RECOMMENDATION

That the report be received.

DISCUSSION

3rd April	Attended Community Cabinet Meetings held in Pt Broughton and Clare. Including a Mayoral Dinner hosted by the Premier Mr Weatherill, on Monday evening.
4th April	Along with CEO Andrew Cameron, Crs Stock and Bittner we attended the Local Government Community Cabinet presentation at Clare Golf Club, followed by a community afternoon tea session at Balaklava.
5th April	Special Elected Members 17/18 Budget Workshop.
11th April	YP Council hosted a visit from the Dog and Cat Management Board who invited the CEO and Mayor to join them for dinner at Ardrossan.
12th April	Joined staff for presentations with Dog and Cat Management Board. Bush Camping Working Party Meeting. Monthly Council meeting followed by 2nd Special Elected Members 17/18 Budget Meeting.
20th April	One of the speakers representing the Council and community at the Public Hospital Forum meeting held in the Yorketown Town Hall attended by approx. 600 people to discuss the future of the surgeries and medical procedures at Yorketown Hospital
21st April	Attended the Local Government Association Ordinary General Meeting in Adelaide.
22nd April	Represented Council and participated in the ANZAC ceremony prior to the YP Football League and Netball games between Central Yorke Cougars and Ardrossan Roos ANZAC Service round held at Maitland. A very impressive remembrance occasion.
25th April	Attended the Dawn Service at Stansbury followed by a speaking engagement at Bublacowie Military Museum service held later that morning. On behalf of Council I laid wreaths at both ANZAC ceremonies.
26th April	Monthly Elected Members Workshop.
27th April	Day surgery in Calvary Hospital.

30th April	Attended the History Festival Launch as the emcee held at Ardrossan, a fine community afternoon of historical significance. Special Guest speaker was Cr Jeff Cook.

INFORMATION

AGENDA

CHIEF EXECUTIVE OFFICER

IA/ITEM 4.3

1. CEO ACTIVITIES MAY 2017

PURPOSE

To keep Elected Members informed of other meetings and activities during the month of April 2017.

RECOMMENDATION

That the report be received.

DISCUSSION

4th April	Along with Mayor Agnew, Crs Stock and Bittner we attended the Local Government Community Cabinet presentation at Clare Golf Club, followed by a community afternoon tea session at Balaklava.
5th April	Special Elected Members 17/18 Budget meeting.
7th April	Legatus CEO Management Group meeting held at Clare.
11th April	LG Professionals SA Executive Meeting. YP Council hosted a visit from the Dog and Cat Management Board who invited the CEO and Mayor to join them for dinner at Ardrossan.
12th April	Corporate Management Team Meeting, presentation with staff to the Dog and Cat Management Board. Monthly Council meeting.
13th April	Meeting with Ardrossan Progress representatives.
19th April	Budget Meeting with Corporate Management Team / Finance Staff.
20th – 21st April	Local Government Association Ordinary General Meeting and Showcase.
26th April	Ardrossan Hospital and Trust Board Meetings Monthly Elected Members Workshop.

CHIEF EXECUTIVE OFFICER

IA/ITEM 4.3

2. ACTION LISTING REPORT

PURPOSE

To keep Elected Members updated on the status of the Action Listing.

RECOMMENDATION

That the report be received.

LINK TO STRATEGIC PLAN

Goal: 5 Responsible Governance

Strategy: 5.5 Undertake effective risk management

DISCUSSION

The Action List included in the Council Agenda each month will incorporate action items from Council along with the current status.

RISK/LEGAL/LEGISLATIVE IMPLICATIONS

Local Government Act 1999

Yorke Peninsula Council's Risk Management Framework

ATTACHMENTS

Attachment 1: Action Listing

COUNCIL MEETING 10th May 2017

Action List

Responsible Officer	Agenda Item Number	Task	Due Date	Status
Director Development Services	10th Aug 10 Item 20.4	Advise the Dept of Environment and Natural Resources that Council wish to Relinquish Care and Control of Crown Land Lot 88 Main Street Curramulka CR 5856/772	Completed	Community have taken on control of land. Withdrew request to DEWNR for relinquishing care/control.
22nd January 2014				
Director Development Services	DA/CCS/R4	Organise Land Only lease for Balgowan Camping Ground	June 2017	Crown consent received – draft sent to Balgowan Progress Association for review.
14th May 2014				
Director Assets & Infrastructure Services	DA/AIS/R3	Organise to have the following documents signed and sealed for the Walk the Yorke Leisure Trail with the State Government and private landholders	July 2014 – ongoing for duration of project	Only one private agreement still outstanding. Ongoing
13th May 2015				
Director Development Services	DA/DS/R2	Council agreed to accept care, control and management of Lot 10 Moorowie Terrace Port Moorowie CR5323/554	As soon as Ministerial approval is granted	Response from Minister Received 29/08/2016 – Awaiting Additional Info from FOPM
10th June 2015				
Director Development Services	DA/CCS/R4	Relinquishment of care/control of Crown land occupied by the Royal Volunteer Coastal Patrol SA Inc. Port Victoria adjacent to the Port Victoria CFS station to accommodate the new CFS station requirements	Associated with Port Victoria CFS issue. RVCP will be transferred to Crown as result of Council relinquishing care/control. May 2017	Approval received completed
12th August 2015				
Director Development Services	DA/CCS/R5	Finalise the proposed lease for the Royal Volunteer Coastal Patrol at Point Turton	May 2017	Final lease sent to lessee for signing.

9th March 2016				
Director Assets & Infrastructure Services	DA/AIS/R1	Advise affected land owners in relation to Clinton Road Land Acquisition values	August 2016	Completed
13th July 2016				
Director Development Services	DA/DS/R3	Commence Road Closure Process for un-named road reserve Section 297 PLN 130800 CT: 5348/524 ST Johns Pty Ltd	June 2017	Outcome of Community Engagement to May Council Meeting Completed
10th August 2016				
Director Development Services	DA/DS/R1	Commence Road Closure Process of unmade road reserve and sale to Adelbridge Pty Ltd	June 2017	Outcome of community engagement to May Council Meeting Completed
14th September 2016				
Director Corporate and Community Services	DA/CCS/MON	Staff to investigate ways to reduce the 3% sustainability rate increase – various strategies	December 2016	Ongoing
Director Development Services	DA/DS/R9	Proceed with the community engagement process for Revocation of Land at Black Point Allotment 201	May 2017	Outcome of extended community engagement to May Council meeting completed
Director Development Services	DA/DS/R10	Proceed with the community engagement process for Revocation of Land at Black Point Allotment 202	May 2017	Outcome of extended community engagement to May Council meeting completed
Director Development Services	DA/DS/R11	Proceed with the community engagement process for Revocation of Land at Black Point Allotment 203	May 2017	Outcome of extended community engagement to May Council meeting completed
Director Development Services	DA/DS/R12	Proceed with the community engagement process for Revocation of Land at Black Point Allotment 204	May 2017	Outcome of extended community engagement to May Council meeting completed

10th October 2016				
Director Development Services	General Business – Question on Notice	Investigate the possibility of the inclusion of a RV dump point in the Minlaton Show Grounds	April 2017	Under investigation
14th December 2016				
CMT	Motion on Notice	Staff conduct a review of Township Speed Limits and consult with affected communities in relation to their preferred option	March 2017	Under Review
Director Development Services	DA/DS/R4	Organise to finalise the supplementary deed for the LMA - Lot 7 in DP44261	April 2017	Completed
18th January 2017				
CEO	DA/CEO/R2	Organise to have sub delegations to staff updated in relation to Nuisance and Litter Legislation	April 2017	Completed
8th February 2017				
Director Development Services	DA/DS/R1,R2, R3, R4	See September 2016 Items above	Deferred until May 2017	Reports to May 2017 Council meeting Completed
Director Development Services	DA/DS/R5	Finalise revocation of community land process for Kainton Properties	June 2017	With Conveyancers for transfer process
8th March 2017				
Motion on Notice		Black Point Boat Ramp Walkways Tender decision rescinded	April 2017	Matter laid on the table Lifted and Referred to April 2017 meeting Completed
Director Corporate and Community Services	DA/CCS/R2	Organise to make one off financial assistance grant for Pine Point Progress Association for establishing post office facility	March/April 2017	Underway
Director Corporate and Community Services	DA/CCS/R3	Organise to bring a report back to May 2017 Council meeting to allow a separate rate to be declared on properties at Chinaman Wells to fund loan for seawall	June 2017	Preliminary plans received for lodgement to Surveyor General Report May 2017 meeting Completed

Director Development Services	DA/DS/R2	Commence Road closure process for Wool Bay and exclude as community land	May 2017	With Maloney Field Services to prepare preliminary plans and notices
Director Development Services	DA/DS/R3	Proposed Expansion of Bush Camping Locations (Live motion 064/2017 (08/03/2017) laid on table)	Future meeting	Matter laid on table Report to May meeting Completed
Director Development Services	DA/DS/R5	Organise for replacement of crossovers at Port Vincent and the entrance ramp at Yorketown Office from Access Advisory WP meeting	April/May 2017	Underway
12th April 2017				
Questions Without Notice	Item 1.10	Question taken on Notice by Director Corporate and Community Services in relation to Coobowie Progress Associations loan	June 2017	Underway
CEO	DA/CEO/R1	CEO to work through design and safety issues for the Black Point Boat Ramp Walkways with all stakeholders	June 2017	
CEO	DA/CEO/R2	Confirm with LGA that Council supports the public awareness campaign	May 2017	Completed
CEO	DA/CEO/R3	Prepare and distribute sub-delegations to appropriate staff and organise delegations register for Website	April 2017	Completed
Director Corporate and Community Services	DA/CCS/R2	Organise debenture loan for Chinaman Wells Seawall Funding	June 2017	In Progress Completed
Director Development Services	DA/DS/R1	Organise for sign and seal on relevant documents relating to supplementary deed for the LMA - Lot 7 in DP44261	May 2017	Completed

Director Development Services	DA/DS/R2	Organise to update IS061 with agreed changes to Fire Safety Committee	May 2017	Completed
Director Corporate and Community Services	CA/CCS/R1	Advise supplier of successful quotation and agreement to be entered into for 5 year period	April 2017	Completed
Director Assets and Infrastructure Services	CA/AIS/R2	Advise successful tender outcome to all involved in process for purchase of construction grader	April 2017	Completed

DIRECTOR CORPORATE AND COMMUNITY SERVICES

IA/ITEM 4.4

1. ART EXHIBITION WORKING PARTY MEETING MINUTES – 30th MARCH 2017

PURPOSE

The Art Exhibition Working Party is a Working Party of Council. A copy of the minutes from their meeting held on 30th March 2017 is attached.

RECOMMENDATION

That the report be received.

LINK TO STRATEGIC PLAN

Goal: 1 Economically Prosperous Peninsula

Strategy: 1.4 Support local events and help attract new events

1.5 Partner and build positive relationships with key stakeholders (e.g. Regional Development Australia, Central Local Government Region, YP Tourism and Progress Associations) to progress tourism and business growth, including enabling the attraction of niche businesses

BACKGROUND

To keep Council and the community informed of progress in delivering the 2018 Yorke Peninsula Art Exhibition.

DISCUSSION

Business discussed at the meetings centred around:

- Letters to Sponsors, schools and regular users of Ardrossan Town Hall
- Review additional Sponsors and school mail out list
- Website redesign
- Poster competition for schools
- SA Life coverage
- Catalogue of photos from previous exhibitions
- Previous Awards
- 2017/2018 Proposed Budget
- Review of Action List
- Review of date of next meeting

COMMUNITY ENGAGEMENT PLAN

Not applicable

CONSULTATION PROCESS

In preparing this report, the following Yorke Peninsula Council officers were consulted:

- Director Corporate and Community Services

In preparing this report, the following External Parties were consulted:

- Art Exhibition Working Party

POLICY IMPLICATIONS

Not applicable

BUDGET AND RESOURCE IMPLICATIONS

Funding provided for in the 2016/2017 adopted budget.

RISK/LEGAL/LEGISLATIVE IMPLICATIONS

Not applicable

ATTACHMENTS

Attachment 1: Art Exhibition Working Party Minutes 30th March 2017

Minutes of the Meeting of the Art Exhibition Working Party

held on Thursday 30th March 2017
in the Maitland Council Office
commencing at 2.00pm

(Subject to confirmation)

ITEM 1 OPEN

1.1 Welcome by Chairperson Cr Alan Headon declared the meeting open at 2.04pm and thanked everyone for attending.

1.2 Present – Cr Alan Headon, Cr Darren Braund, Pam Headon, Bobbi Pertini, Lesley-Anne Swaans, Carina Congdon, Richard Cane, Leanne Cane, Jenny Robyn.
In Attendance: Rachel Rich (minute secretary)

1.3 Apologies/leave of absence – Anne Eyles, Cr Tania Stock.

1.4 Minutes of previous meeting –

Bobbi Pertini moved **Carina Congdon seconded**

That the Minutes of the Art Exhibition Working Party meeting held on 21st February 2017, with the following alteration to include *Cr Tania Stock as being present at the meeting,* be circulated be confirmed as a true record.

CARRIED

1.5 Conflict of Interest - The Chairperson reminded members of their obligations in relation to Conflict of Interest provisions.

1.6 Cr Braund introduced Jenny Robyn as a representative for the Edithburgh Art Group.

ITEM 2 BUSINESS ARISING

2.1 Letters to sponsors, schools and regular users of Ardrossan Town Hall.

Bobbi briefed all attendees regarding the letters that are ready to be signed by Cr Headon and sent out to previous sponsors and regular users of Ardrossan Town Hall. Bobbi also advised that she is in the process of collating a potential list of local business to approach for wider sponsorship. Suggestion was made to coordinate an electronic signature for Cr Headon due to the number of business already on the next mail out list.

2.2 Review Sponsorship and school mail out list

The sponsorship mail out list is mainly Council suppliers at this stage, with local businesses being added from each township. The School mail out list incorporates the Copper Coast district and Bobbi talked about the potential new format for school entries which will allow more fairness for younger students for prize categories.

Discussion ensued around what is the best incentive to get schools involved. What is the incentive for the schools? How to manage the possibility of receiving more entries, with various mediums with the current space available.

Lesley-Anne Swaans moved Cr Braund seconded

That the letter will be updated and sent out before the next meeting with previously discussed suggestions.

CARRIED

2.3 Website redesign

Carina talked about a recent meeting with a local website designer who is just getting started, to rebuild and update the Art Exhibition website. The new website will include artists having the ability to register online, having the ability to view it on mobile tablets/phones, include a sponsorship section with applications, contact page to include the area/trail of different areas where exhibitions will be held.

A catalogue of photos has been put together to view in addition to a catalogue of sponsors.

The website will also incorporate Facebook and Instagram to ensure we connect with a wider audience.

When artists enter online, they will be required to upload a photo of their entry which can be fed straight into the catalogue.

2.4 Poster competition

Carina contacted various Art teachers from a number of local schools to talk about being involved in a competition for the creation of a poster for the Art Exhibition. This competition would be open to senior and vocational students (TAFE). Discussion occurred on the terms and conditions of entry with the submission deadline being 1st September 2017.

The announcement of winners could be pitched at a possible Exhibition Launch in September which would follow with the website going live, entries being opened and enable more coverage of the expansion of the Art Exhibition.

Cr Braund queried the essential information that needs to be involved and the criteria will need to be reviewed to enable digital copy to be provided.

Richard Cane suggested put a response date on emails, so people are more inclined to respond.

2.5 SA Life Coverage

Carina has secured a spot in the social pages of SA Life to be published in April 2018 (this will happen after the exhibition). It was suggested to secure a spot for the launch, as this is free advertising. In addition, a designated social photographer would be required as the criteria for photos is restricted for release until SA Life have published the event.

2.6 Catalogue of photos (previous exhibits)

Bobbi explained the catalogue of photos and suggested that we could approach Fuji Xerox to see if they could provide in-kind sponsorship to print the 2018 catalogue.

2.7 Previous Awards

Bobbi raised the fact that Council has won a number of awards previously and suggested that the awards be put on display at the launch and opening night.

2.8 2017/18 Proposed Budget

Bobbi presented details around the upcoming budget figures and potential sponsorship. The presented budget is yet to be endorsed by Council.

2.9 Review remaining Action List items

Alan suggested having a strong commitment from community groups to host other mediums throughout the exhibition period. Suggestion to decide on what areas will host an event to be considered at the next meeting.

The Working Party reviewed the remaining items on the Action List.

ITEM 3 NEW BUSINESS

3.1 Laptop, printer and dongle at the Maitland Town Hall to be removed as they are not currently being utilised.

Bobbi Pertini left meeting at 3.50pm

3.2 Lesley has been in contact with South Aussie with Cosi and will see if we can get coverage on the show or perhaps even sponsorship.

Cr Braund and Jenny left meeting at 3.56pm

3.3 Aboriginal Artist from Maitland sent out media release about her first solo exhibition. It might be worth the Working Party approaching her in the future as a demonstrating or artist in residence.

ITEM 4 NEXT MEETING

Wednesday 26th April 2017 at 2:00pm

ITEM 5 MEETING CLOSE

The meeting closed at 4.05pm

…….

Chairperson – Alan Headon

Item	Responsible Officer	Due Date	Progress	Completed Date
Town Square – ideas of linking events	Richard			
Raffle items – source artwork. SA Lotteries rules have been confirmed and provided to Committee. Dependent upon value of prizes, may need to get a licence which is	Alan (Victoria Rolinski), Darren, David (Bruce Davey) and Anne		Darren has secured a painting from Terry Braund ☺. Awaiting confirmation from others.	
Poster – school and TAFE competition to create promotional poster to include terms and Conditions etc.	Carina	01/09/2017	Underway – draft concept approved, letter to institutes sent out.	
Source Grants and write applications - Australian Council of Arts Grant due 03/10/2017	Lesley and Alan	03/10/2017	On hold.	
Website design to be reviewed	Carina/ Bobbi	28/04/2017	Underway – review of website and content being undertaken.	
Sponsorship – review list and add possible sponsors. Include wineries, coopers, local businesses etc.	All	28/04/2017	Underway, draft list completed with all Council suppliers listed.	
Prizes to be determined for: – Local Artists; – Traditional Artwork; – Open Category; – Peoples choice; – Schools. Prize pool of $10,000????	All	28/07/2017	To be determined once sponsorship is confirmed.	
Participating Artists – Artists in residence. This could include demonstrations, cartoon character drawings, school holiday activities (i.e. art classes for kids for a fee – aerosol art classes, drawing, painting classes). All to consider possibilities.	All	30/01/2018		
Categories to be determined. Ideas included: – Painting, Sculpture, Photography and Drawings	All	30/04/2017	To be discussed at April meeting.	
Research other Art Exhibitions	Carina/ Bob/ Lesley	30/04/2017	Underway	

Item	Responsible Officer	Due Date	Progress	Completed Date
Judges – need to write out to three (one local judge). Generally we will cover costs including travel and accommodation.	Pam and Alan	30/06/2017		
Bar for the opening night. Need to write to ACC to see if they can do again?		30/11/2017	On hold until closer to the event.	
Where do we advertise – website, Facebook, twitter, TV commercial??	All	Ongoing		
Sponsorship – contact Carclew, Arts and Fringe	Lesley	Ongoing	In progress, Lesley has made contact and is awaiting response.	
Book Ardrossan Town Hall	Rachel	21/02/2017	Completed	7/02/2017
Review of Council Policy	All		Completed	21/02/2017
Review Terms of Reference	David	21/02/2017	Completed	21/02/2017
Appointment of Chairperson	David	21/02/2017	Completed	21/02/2017
Letters to go out to following organisation: • Wheare Transport - to request assistance in support for transport of art works. • Garden Club – to request assistance for setting up hall for exhibition.	Bobbi		Completed	30/03/2017
Invitation to Sponsor – letter to previous sponsors to get involved	Bobbi	30/03/2017	Completed	30/03/2017
Notify Schools on the Yorke Peninsula to give them plenty of notice about the Exhibition and so they can build into their curriculum this year	Bobbi		Completed	30/03/2017
Write out to regular users of the Hall notifying of unavailability during Exhibition	Rachel	30/03/2017	Completed	30/03/2017
Budget list to be compiled (reserve of $21k)	David	30/03/2017	Completed	30/03/2017

DIRECTOR ASSETS & INFRASTRUCTURE SERVICES

IA/ITEM 4.5

1. CONSTRUCTION AND MAINTENANCE WORKS

PURPOSE

To provide a summary of capital and maintenance works undertaken within Assets and Infrastructure Services throughout the month preceding the May 2017 meeting of Council.

RECOMMENDATION

That the report be received.

LINK TO STRATEGIC PLAN

Goal: 2 Community Connected through Infrastructure

Strategy: 2.5 Explore provision of new infrastructure

2.6 Install and upgrade appropriate traffic control device management

2.7 Upgrade and beautification of open (recreation) spaces (e.g. playgrounds, water parks, BBQ areas etc.)

BACKGROUND

This report provides Council with a summary of the capital and maintenance works undertaken within Assets and Infrastructure Services throughout the month preceding the Council meeting.

DISCUSSION

- The following works / upgrades have been applied to Council's Community Wastewater Management Schemes (CWMS), Water Schemes and Stormwater Harvesting Schemes:

  CWMS

  - Chemical safety shower installed at WWTP — **Hardwicke Bay**
  - Effluent blockage attended to — **Maitland**
  - Switchboard upgraded — **Port Vincent**
  - Chlorine storage tank repaired — **Stansbury**

  Water Schemes

  - New water meters installed in subdivision — **Black Point**
  - New plant and tank levelling system installed — **Desalination Plant**
  - Storage tanks monitored — **Desalination Plant**

  (All CWMS, Water Schemes and Stormwater Harvesting Schemes are monitored with water quality testing in accordance with SA Health and Environmental Protection Authority [EPA] licence conditions.)

- Mowing of parks, gardens and reserves is ongoing throughout the district in line with available resources, with the focus on presentation for Anzac Day services.

- The status of road construction and maintenance requirements is summarised in the table below, complimenting 2016/17 budget allocations:

Road	Description of Works	Work Status	Estimated Completion Date
Brutus Road	Resheeting a 2km section.	Ongoing	End-May 2017
Clinton Road	Upgrading to a sealed road.	Ongoing – Approx. 8km remaining	End-June 2017
Cumberland Road, Port Clinton	Kerb and water table installation.	Commenced	End-May 2017
Harmer Road (by contractors)	Patch sheeting on sections to be identified.	Completed	
McCauley Road (by contractors)	Widening to a set width and resheeting a 2km section.	Completed	
High Street, Balgowan	Kerb and water table installation.	Commenced	End-May 2017
North South Road (by contractors)	Widening to a set width and resheeting a 2km section.	Completed	
Pine Point Road (by contractors)	Widening to a set width and resheeting a 3km section between Hasting Road and James Well Road, and a 3.1km section between Yorke Highway and St Vincent Highway.	Completed	
Waterloo Bay Road	Resheeting a 2km section.	Ongoing	Early-May 2017

- Information regarding roadside vegetation maintenance activities undertaken by Council are detailed in the table below:

Road Name	Start Point	End Point	Status
South			
South Coast Road	Waterloo Bay Road	Hundred Line Road	Current
Feneley Road	Marion Bay Road	Heading West	Programmed
North			
Sandy Church Road	Spencer Highway	Yorke Highway	Completed
Urania Road	Spencer Highway	Wauraltee Road	Current
Barley Stacks Road	Spencer Highway	Port Victoria Road	Programmed

- Patrol Grading is ongoing throughout the district in line with the current schedule and technique applied.
- Resheeting of footpaths has been applied at identified locations within Ardrossan, Hardwicke Bay, Minlaton, Port Victoria, Port Vincent, Stansbury and Yorketown.

- Roadside vegetation clearance by contractor (Mechanical Vegetation Solutions Pty Ltd) is well underway. The status of the roads proposed to be serviced in the first year of the three-year contact is outlined in the table below. The statuses are defined as follows:
    - **Not Commenced**
    - **Stage 1** – Bulk horizontal cut
    - **Stage 2** – Bulk horizontal cut / vertical removals / envelope widths
    - **Completed**

Road Name	Start Point	End Point	Status
South			
South Coast Road	Yorke Highway	Hundred Line Road	Stage 2
Point Annie Road	Liddiard Road	Lighthouse Road	Not Commenced
Rockleigh Road	West Beach Road	Wurlie Road	Not Commenced
Wurlie Road	Point Souttar Road	Coast	Stage 1
Hayes Road	Lower White Hut Road	Corny Point Road	Not Commenced
Gleesons Road	White Hut Road	Coast	Stage 1
Yellowoorowie Road	Point Souttar Road	Hayes Road	Not Commenced
Point Souttar Road	Yorke Highway	North Coast Road	Stage 1
White Hut Road	Yorke Highway	Liddiard Road	Stage 1
McEacherns Beach Road	Waterloo Bay Road	Coast	Not Commenced
McEacherns Beach Road	Warooka Road	Waterloo Bay Road	Stage 1
Hayward Park Road	North Terrace, Wool Bay	St Vincent Highway	Stage 1
Dump Road	St Vincent Highway	Minlaton Road	Not Commenced
North			
Mount Rat Road	Spencer Highway	West Terrace, Curramulka	Stage 1
Nalyappa Road	Spencer Highway	Port Victoria Road	Not Commenced
Balgowan Road	Main Street, Balgowan	Spencer Highway	Stage 1
Balgowan Road	Spencer Highway	Upper Yorke Road	Not Commenced
Barnes Road	Spencer Highway	Nalyappa Road	Not Commenced
Weetulta Tank Road	Arthurton Road	Pipeline Road	Not Commenced
Arthurton Road	Kalkabury Road	Pedler Road	Stage 1
Agery Road	Pedler Road	Arthurton Road	Stage 1
Kainton Road	Holman Road	Yorke Highway	Not Commenced
Ardrossan Road	Upper Yorke Road	Yorke Highway	Stage 1
Clinton Road	Shannon Terrace, Maitland	Ardrossan Road	Stage 1
Cunningham Road	Spencer Highway	Back Road	Not Commenced

- Approximately 40 Customer Service Requests (CSRs) have been addressed throughout April with activities including:
    - Coastal infrastructure repairs
    - Public building maintenance
    - Sign replacement
    - Stormwater infrastructure maintenance
    - Traffic control device replacement
    - Vandalism response
- Staff have commenced the reinstatement of barrier fencing at the car park area adjacent to the Minlaton Area School.
- Access infrastructure has been installed within Port Vincent, as identified and recommended by the Access Advisory Committee.
- A new section of handrail has been installed at the beach access ramp at Port Rickaby.
- Remedial works, such as post and rail fencing, and replacement of rock wall, has been undertaken at the Port Victoria playground and BBQ area.
- The jetpatcher has serviced areas within Arthurton, Price and Port Clinton, and Ardrossan Road.

COMMUNITY ENGAGEMENT PLAN

Not applicable

CONSULTATION PROCESS

In preparing this report, the following Yorke Peninsula Council officers were consulted:

- Infrastructure Manager
- Operations Manager
- Works Manager
- Operations Coordinator
- Leading Worker Central
- Leading Worker North
- Leading Worker South
- Works Supervisor North
- Works Supervisor South

In preparing this report, the following External Parties were consulted:

- Nil

POLICY IMPLICATIONS

Not applicable

BUDGET AND RESOURCE IMPLICATIONS

Within capital and operations budgets

RISK/LEGAL/LEGISLATIVE IMPLICATIONS

Not applicable

ATTACHMENTS

Nil

DIRECTOR ASSETS & INFRASTRUCTURE SERVICES

IA/ITEM 4.5

2. 2017 LGA ROADS AND WORKS CONFERENCE

PURPOSE

To seek expressions of interest from Elected Members to attend the 2017 Local Government Association (LGA) Roads and Works Conference, which is being held in Port Pirie from Wednesday 16th to Friday 18th August 2017.

RECOMMENDATION

That the report be received.

LINK TO STRATEGIC PLAN

Goal: 5 Responsible Governance

Strategy: 5.2 Effective leadership and informed decision making

BACKGROUND

The LGA Roads and Works Conference is an annual event, which provides attendees with the opportunity to meet and discuss issues relating to the provision of roads and works services.

The Conference includes networking opportunities, information sessions and presentations.

In 2016 the Conference featured information sessions covering a range of topics including:

- asset management;
- use of technology;
- electronic cars;
- waste management;
- open spaces; and
- community engagement through social media.

DISCUSSION

The 2017 LGA Roads and Works Conference is being held in Port Pirie from Wednesday 16th to Friday 18th August 2017.

Travel to and from Port Pirie will occur on Wednesday 16th and Friday 18th August 2017 respectively.

Further information regarding the Conference will be available in May 2017, and it is expected registrations for the Conference will open in June 2017.

To secure early registration for the Conference Elected Members are encouraged to express their interest in attending to the Executive Assistant to the Director Assets and Infrastructure Services, Kira Tapps, by Friday 2nd June 2017.

COMMUNITY ENGAGEMENT PLAN

Not applicable

CONSULTATION PROCESS

In preparing this report, the following Yorke Peninsula Council officers were consulted:

- Nil

In preparing this report, the following External Parties were consulted:

- Nil

POLICY IMPLICATIONS

Not applicable

BUDGET AND RESOURCE IMPLICATIONS

Costs associated with attendance at the 2017 LGA Roads and Works Conference are unknown at this stage as the LGA has not released any detailed information regarding the Conference beyond the host city and dates.

Provision is made in the annual budget to cover costs associated with Elected Members Training and Development.

RISK/LEGAL/LEGISLATIVE IMPLICATIONS

Not applicable

ATTACHMENTS

Nil

DIRECTOR DEVELOPMENT SERVICES

IA/ITEM 4.6

1. INSPECTORIAL ACTIVITY REPORT

PURPOSE

To inform Council of the activities of the Inspectorial Team.

RECOMMENDATION

That the report be received.

LINK TO STRATEGIC PLAN

Goal: 5 Responsible Governance

Strategy: 5.3 Meet all legislative requirements and compliance with Council's internal controls

BACKGROUND

This report provides Elected Members with information relating to activities of the Inspectorial staff.

DISCUSSION

During the past month Council's Inspectors have dealt with many routine matters including illegal campers, wandering dogs and nuisance dogs and cats.

One dog has been impounded for wandering at large during the past month, which was not claimed by its owner.

Routine patrols of boat ramps have been performed to ensure that users are paying for the facilities. One person was issued an Expiation Notice for failing to purchase a ticket prior to launching their boat.

Regular patrols have also occurred at the bush camping reserves to ensure campers are obtaining a bush camping permit prior to using the facilities. The majority of the sites were checked by Rangers on Easter Saturday. The camp grounds were very well utilised, with many of the locations near capacity. Council Rangers believe that there were more campers over Easter weekend than the previous Christmas holiday period. Those campers that had not obtained a bush camping permit prior to setting up camp were requested to obtain a permit in the normal manner.

Council Rangers routinely patrol all townships for traffic management, including foot patrols, paying particular attention to disabled parking bays and vehicles parking on yellow lines. Two drivers were issued Expiation Notices for unauthorised parking in a disabled parking bay at Balgowan. A business was cautioned for setting up their table and chairs on a footpath in Yorketown without first obtaining a permit from Council.

Council's Fire Prevention Officers have been monitoring farmers who have been burning off as per their Schedule 9 Permit, pursuant to the Fire and Emergency Services Act. A farmer was issued an Expiation Notice for not following a condition of his permit. The farmer also failed to notify Council of his intention to conduct a burn off and did not put in appropriate fire breaks. Consequently, his permit was also revoked. Two fires have escaped

while farmers were conducting burn offs. The Country Fire Service (CFS) brigades attended and extinguished both the fires. Council's fire Prevention Officer attended both incidents and believe there were no breaches of the permit conditions and that gusty winds had caused the escapes. No further action was taken in relation to these incidents.

A landholder at Port Clinton was Expiated for burning in the open after he lit up a large pile of vegetation that he had been accumulating near his house. The fire was clearly visible from Yorke Highway.

COMMUNITY ENGAGEMENT PLAN

Not applicable

CONSULTATION PROCESS

In preparing this report, the following Yorke Peninsula Council officers were consulted:

- Inspectorial Staff

In preparing this report, the following External Parties were consulted:

- Nil

POLICY IMPLICATIONS

Not applicable

BUDGET AND RESOURCE IMPLICATIONS

Routine inspectorial activities are contained within the 2016/17 Annual Business Plan.

RISK/LEGAL/LEGISLATIVE IMPLICATIONS

Fire and Emergency Services Act 2005

Dog and Cat Management Act 1995

Local Government Act 1999

The activities undertaken by Council Rangers are based on reducing the risk of nuisance, injury, public damage and disaster to the community.

ATTACHMENTS

Nil

DIRECTOR DEVELOPMENT SERVICES

IA/ITEM 4.6

2. DEVELOPMENT APPLICATION DECISIONS

PURPOSE

To inform the Elected Members of Development Application decisions for the period 3rd April to 28th April 2017.

RECOMMENDATION

That the report be received.

LINK TO STRATEGIC PLAN

Goal: 1 Economically Prosperous Peninsula

Strategy: 1.1 Provide easier, streamlined development approval application process

BACKGROUND

To keep Elected Members informed of Development Application decisions under delegated authority.

DISCUSSION

The following is a list of all Development Applications processed for the period 3 April to 28 April 2017.

Yorketown

544/1106/2016	544/1264/2016	544/1346/2016
544/1451/2016	544/1495/2016	544/1501/2016
544/1507/2017	544/1046/2017	544/1053/2017
544/1057/2017	544/1077/2017	544/1106/2017
544/1113/2017		

Maitland

544/2056/2015	544/1130/2016	544/1417/2016
544/1419/2016	544/1448/2016	544/1478/2016
544/1485/2016	544/1493/2016	544/1509/2016
544/1515/2016	544/1005/2017	544/1007/2017
544/1023/2017	544/1035/2017	544/1037/2017
544/1050/2017	544/1055/2017	544/1058/2017

544/1060/2017	544/1063/2017	544/1066/2017
544/1072/2017	544/1092/2017	544/1100/2017
544/1101/2017	544/1103/2017	544/1132/2017

Land Division

544/D001/2017	544/D003/2017

COMMUNITY ENGAGEMENT PLAN

Not applicable

CONSULTATION PROCESS

In preparing this report, the following Yorke Peninsula Council officers were consulted:

- Planning and Building Officers

In preparing this report, the following External Parties were consulted:

- Nil

POLICY IMPLICATIONS

Not applicable

BUDGET AND RESOURCE IMPLICATIONS

Not applicable

RISK/LEGAL/LEGISLATIVE IMPLICATIONS

Local Government Act 1999

Development Act 1993

Council's Development Plan

Development Assessment functions involve critical risk management considerations which include meeting legislative responsibilities, environmental issues, impact upon community and safety.

ATTACHMENTS

Attachment 1: Development Application Decisions Register.

LIST OF DEVELOPMENT APPLICATIONS & DECISIONS ISSUED BY THE ASSISTANT BUILDING SURVEYOR UNDER DELEGATION FOR THE PERIOD 3 APRIL 2017 TO 28 APRIL 2017

YORKETOWN

Dev. App. No.	Name & Address	Location	Proposal	Class	Area m^2	Cost $	Conditions Planning Building	Assessment / Valuation No	Decision Date	Builder & Licence No
544/1106/2016	Royal Volunteer Coastal Patrol SA PO Box 1 URANIA	(Lot 91) 68-70 Esplanade POINT TURTON	Boat Storage Shed	7b	135	18,000	Planning 10 Building 4	102905 5400457950	21 April 2017	TBA
544/1264/2016	R & E Coutts 14 Burke Parade HEWITT	(Lot 38) 6 Parsee Street EDITHBURGH	New Dwelling, Garage UMR & Alfresco	1a 10a 10a	138 37.1 30.4	234,000	Planning 5 Building 4 Private Certifier	433649 5405118915	13 Oct 2016	Coast To Coast Homes BLD225824
544/1346/2016	Viterra Operations Level 1, 186 Greenhill Road PARKSIDE	(Lot 8) 483 Hickeys Drive COOBOWIE	Grain Bunker Storage	10b	24,400	575,000	Planning 1 Building N/A	404608 5406317748	4 Apr 2017	Owner Builder
544/1451/2016	A & E Hewitt 19 Valleyview Cres HACKHAM WEST	(Lot 43) 11 Lantana Court STANSBURY	Dwelling with Garage UMR; Garage	1a 10a	199 72	200,000	Planning 9 Building 2 Private Certifier	418814 5404805510	20 April 2017	TBA
544/1495/2016	R J Germein PO Box 1055 PORT VINCENT	(Sec 14) 2491 St Vincent Hwy PORT VINCENT	Machinery Shed	7b	1100	186,000	Planning 1 Building 8	312272 5408511456	31 March 2017	A Conley GL41868
544/1501/2016	Corny Point Progress Assoc PO Box 38 CORNY POINT	Sec 175 Stirling Street CORNY POINT	Replace Existing Beach Shelter	10a	24	11,385	Planning 7 Building 2	106419 5400684504	12 April 2017	S Pilkinton BLD250545
544/1507/2016	Telstra C/- Service Stream Limited PO Box 14570 MELBOURNE	(Lot 2) Marine Parade HD MOOROWIE	Telecommunications Facility	10b	60	250,000	Planning 2 Building 2 Private Certifier	421008 5406366769 A0010	28 April 2017	Service Stream Limited
544/1046/2017	J Burke & C Bourne PO Box 44 MINLATON	(Lot 138) 28 Curramulka Road MINLATON	Shed Extension	10a	87.84	16,400	Planning 4 Building 3	304980 5407940005	5 Apr 2017	A Searle BLD180128
544/1053/2017	G & M Twelftree PO Box 6 CURRAMULKA	(Lot 211) 21 Captain Hutchinson Drive POINT TURTON	Attached Split Pergola	10a	37.75	9,786	Planning 1 Building 3	110965 5400784548	3 Apr 2017	A Semmens BLD219814
544/1057/2017	Babirra Pty Ltd PO Box 21 STANSBURY	(PCE 92) 4286 St Vincent Hwy STANSBURY	Demolish Shed; New Implement Shed	7b	504	70,320	Planning N/A Building 2 Private Certifier	218867 5406163005	6 April 2017	TBA

544/1077/2017	B & T Haywood 7 Honner Avenue YORKETOWN	(Lot 7) 7 Honner Avenue YORKETOWN	Demolish Verandah; New Verandah	10a	32.78	8,500	Planning 1 Building 2	202903 5403539628	3 Apr 2017	Owner Builder
544/1106/2017	G Anderson Glenr_44@internode.on.net	(Lot 575) 183 Weavers Road STANSBURY	Implement Shed	7b	360	34,960	Planning 4 Building Nil	218768 5406154002	21 April 2017	TBA
544/1113/2017	Yorke Peninsula Council PO Box 57 MAITLAND	(PTL 45) 10 Fifth Street MINLATON	Garage	10a	74.42	30,000	Planning 1 Building 3	408377 5407693809 A0060	27 April 2017	TBA
TOTAL						**$1,614,291**				

MAITLAND

Dev. App. No.	Name & Address	Location	Proposal	Class	Area m^2	Cost $	Conditions Planning Building	Assessment / Valuation No	Decision Date	Builder & Licence No
544/2056/2015	PC Codrington PO Box 133 CEDUNA	(Lot 71) 16 Cameron Street PORT VINCENT	Garage	10a	75.69	8,000	WITHDRAWN	310102 5408385656	19 Apr 2017	NA
544/1130/2016	KA Eglinton 6 Henderson Court ARDROSSAN	(Lot 39) 6 Henderson Court ARDROSSAN	Verandah and Garage	10a 10a	27.88 37.21	14,100	Planning 5 Building 2	430678 4600388000	21 Apr 2017	TBA
544/1417/2016	S Goss 106 Stansford Rd SALISBURY HEIGHTS	(Lot 19) HD WAURALTEE	New Dwelling; Garage UMR; Alfresco and Verandahs	1a 10a 10a 10a	225 42.3 27 37.5	35,0000	REFUSED	424150 4604684501	12 Apr 2017	NA
544/1419/2016	SJ Olive PO Box 125 ARTHURTON	(Sec 125) 84 Willing Road ARTHURTON	New Sunroom, Verandahs and Retaining Wall	1a 10a	39 71	50,000	Planning 2 Building 1	44834 4607179009	18 Apr 2017	TBA
544/1448/2016	DP Brooks PO Box 189 PORT VICTORIA	(Lot 415) 23-25 Passat Street PORT VICTORIA	Demolish Garage; New Garage	10a	94.79	16,800	Planning 5 Building 2	16295 4603193006	11 Apr 2017	Owner Builder
544/1478/2016	RW and KJ Temple 35 Naretha Street HOLDEN HILL	(Lot 24) Port Victoria Road PORT VICTORIA	Dwelling; Carport; Verandahs and Decks	1a 10a 10a	141.13 42.18 55.95	143,000	Planning 9 Building 5	429233 4604723494	31 Mar 2017	Coast to Coast Homes BLD255824
544/1485/2016	JA Weeks 5 Kaesler Drive NURIOOTPA	(Lot 5) 12 Buttfield Avenue PORT VINCENT	Demolish Existing; New Dwelling, Deck and Garage (UMR)	1a 10b 10a	173.1 76.2 53.7	315,000	Planning 8 Building 7	311589 5408454009	6 Apr 2017	TBA

544/1493/2016	G Gric PO Box 123 CURRAMULKA	(Sec 286) HD KOOLYWURTIE	Machinery Shed	7b	216	28,000	Planning 4 Building 3	414607 5408796957	19 Apr 2017	Owner Builder
544/1509/2016	P and M Webber 10 Shannon Tce MAITLAND	(Lot 10) 17 Beaulah Avenue MAITLAND	New Dwelling	1a	167.48	148,124	Planning 3 Building Nil Private Certifier	434282 602099405	11 Apr 2017	Rivergum Homes Pty Ltd GL113681
544/1515/2016	JW Voyce PO Box 29 GULNARE	(Lot 30) 13 Cardigan Castle Circuit PORT VICTORIA	Garage	10a	72	8,820	Planning 7 Building 2	434456 4604724032	26 Apr 2017	TBA
544/1005/2017	M Baker 69 RM Williams Dv WALKEY HEIGHTS	(Lot 6) 32 Main Street BALGOWAN	New Dwelling	1a	90.53	77,160	Planning 7 Building 1	410126 4605123802	7 Apr 2017	Selecta Homes GL56332
544/1007/2017	R Temple 35 Naretha Street HOLDEN HILL	(Lot 24) Port Victoria Road PORT VICTORIA	Garage	10a	108	9,000	Planning 5 Building 2	429233 4604723494	31 Mar 2017	Owner Builder
544/1023/2017	B Dutschke 24 Kilkerran Tce MAITLAND	(Lot 666) 24 Kilkerran Tce MAITLAND	Verandah	10a	80	10,000	Planning 2 Building 2 Private Certifier	9118 4601702006	28 Apr 2017	Owner Builder
544/1035/2017	D Nicholson 14 Hogarth Street ARDROSSAN	(Lot 34) 14 Hogarth Street ARDROSSAN	New Garage	10a	70	2,000	Planning 5 Building 2	6114 4600364009	5 Apr 2017	P Nagel
544/1037/2017	M Baker 69 RM Williams Dv WALKEY HEIGHTS	(Lot 6) 32 Main Street BALGOWAN	New Garage	10a	41.4	6,465	Planning 5 Building 2	410126 5605123802	7 Apr 2017	JA Turrell BLD249253
544/1050/2017	PM and A Schulz 187 Mc Farlane Rd SANDILANDS	(Sec 123) 1330 Piggery Corner Road SANDILANDS	New Implement Shed	7b	545	68,000	Planning 2 Building 7	27953 5604589002	18 Apr 2017	P Obst BLD147287
544/1055/2017	Yorke Peninsula Council PO Box 57 MAITLAND	(PTS 470) 14 Fowler Terrace PRICE	Caravan Annexe	1a	18.3	4,800	Planning 1 Building 3	41350 4606301084	18 Apr 2017	MJ Lampe BLD26204432
544/1058/2017	GG and JA Smith 54 Marshall Road PORT VICTORIA	(Lot 22) 54 Marshall Road PORT VICTORIA	Garage Extension	10a	24	4,800	Planning 7 Building 2	410233 4603256599	13 Apr 2017	GG Smith
544/1060/2017	JW Voyce PO Box 29 GULNARE	(Lot 30) 13 Cardigan Castle Circuit PORT VICTORIA	Dwelling, Verandah and Deck	1a 10a 10a	162.64 11.38 47	156,525	Planning 8 Building Nil Private Certifier	434456 4604724032	26 Apr 2017	Longridge Group Pty Ltd BLD175837
544/1063/2017	DJ and SF McIntyre PO Box 264 MAITLAND	(Lot 2) Port Victoria Road SOUTH KILKERRAN	Implement Shed	7b	252	23,160	Planning 2 Building 1	427500 4604259265	6 Apr 2017	TBA
544/1066/2017	K Charman PO Box 135 MINLATON	(Lot 55) Leonard Court PARSONS BEACH	Garage	10a	54	7,270	Planning 2 Building 1	321471 5408972210	21 Apr 2017	Owner Builder

544/1072/2017	RA Trinne PO Box 218 PORT VINCENT	(Lot 501) 23 Minlacowie Road PORT VINCENT	Demolish Garage; New Garage	10a	45.28	8,500	Planning 2 Building 2	306779 5408182007	24 Apr 2017	Owner Builder
544/1092/2017	R Tagg richardtagg@bigpond.com	(Lot 26) 25 High Street BALGOWAN	Shed	10a	32	5,600	Planning Nil Building 2	36152 4605062000	18 Apr 2017	TBA
544/1100/2017	M and J Joraslafsky PO Box 48 CURRAMULKA	(Sec 13) 6785 Yorke Highway CURRAMULKA	Implement Shed	7b	110.11	11,550	Planning 2 Building 3	27029 4604513008	19 Apr 2017	Owner Builder
544/1101/2017	N Jarrett 15 First Street ARDROSSAN	(Lot 44) 5 Sanders Street ARDROSSAN	New Dwelling	1a	85.95	83,370	Planning Nil Building 2 Private Certifier	409292 4600312604	28 Apr 2017	Selecta Homes GL56332
544/1103/2017	Tomidate Nominees Pty Ltd 6 The Avenue MEDINDIE	(Sec 81) 82 Greenslade Road MAITLAND	Farm Shed	7b	432	43,000	Planning 1 Building Nil	25155 4604349009	21 Apr 2017	TBA
544/1132/2017	TJ Cross PO Box 80 MAITLAND	(Sec 77) 750 Cross Road MAITLAND	Swimming Pool	10b	13.8	3,900	Planning Nil Building Nil	418079 5604226017	19 Apr 2017	Owner Builder
TOTAL						**$1,245,044**				

LAND DIVISION

Dev. App. No.	Name & Address	Location	Proposal	Conditions Planning Building	Assessment / Valuation No	Decision Date
544/D001/2017 544/1014/2017	A & S Crabb C/- Weber, Frankiw & Associates 178 Main Road MCLAREN VALE	(Lot 20) 2 Parsons Street PORT VINCENT	Land Division	Planning 2 Building 4	429944 5408372310	13 April 2017
544/D003/2017 544/1038/2017	R & T Warren C/- SKS Surveys PO Box 325 STEPNEY	(Sec 302 & 303s) 1258 Bublacowie Rd YORKETOWN	Land Division	Planning Nil Land Division 2	219634 5406205252	6 April 2017

DIRECTOR DEVELOPMENT SERVICES

IA/ITEM 4.6

3. WASTEWATER SYSTEM APPLICATION DECISIONS

PURPOSE

To inform the Elected Members of Wastewater Application decisions for the period 3rd April to 28th April 2017.

RECOMMENDATION

That the report be received.

LINK TO STRATEGIC PLAN

Goal: 1 Economically Prosperous Peninsula

Strategy: 1.1 Provide easier, streamlined development approval application process

BACKGROUND

To keep Elected Members informed of Wastewater Application decisions under delegated authority.

DISCUSSION

The following is a list of all Wastewater System applications processed for the period 3 April to 28 April 2017.

Maitland

050/114/2016	050/008/2017	050/013/2017
050/019/2017	050/020/2017	

Yorketown

050/120/2016	050/010/2017

COMMUNITY ENGAGEMENT PLAN

Not applicable

CONSULTATION PROCESS

In preparing this report, the following Yorke Peninsula Council officers were consulted:

- Environmental Health Officer

In preparing this report, the following External Parties were consulted:

- Nil

POLICY IMPLICATIONS

Not applicable

BUDGET AND RESOURCE IMPLICATIONS

Not applicable

RISK/LEGAL/LEGISLATIVE IMPLICATIONS

Local Government Act 1999

Development Act 1993

Environmental Protection Act 1993

Council's Development Plan

Wastewater System approval functions involve critical risk management considerations which include meeting legislative responsibilities, environmental issues and public health.

ATTACHMENTS

Attachment 1: Wastewater Application Decision Register.

LIST OF WASTE CONTROL APPLICATIONS & DECISIONS ISSUED BY THE ENVIRONMENTAL HEALTH OFFICERS UNDER DELEGATION FOR THE PERIOD 3 APRIL 2017 TO 28 APRIL 2017

Maitland

Septic App. No.	Owner	Location	Proposal	Conditions	Assess. No	Decision Date	Plumber & Licence No
050/114/2016	RW and KJ Temple 35 Naretha Street HOLDEN HILL	(Lot 24) Port Victoria Road PORT VICTORIA	Septic and Soakage	11	429233	31 April 2017	Moonta Plumbing and Gas
050/008/2017	JW Joyce PO Box 29 GULNARE	(Lot 30) 13 Cardigan Castle Circuit PORT VICTORIA	CWMS Connection	11	434456	26 April 2017	Longridge Group Pty Ltd
050/013/2017	M Baker 69 RM Williams Drive WALKLEY HEIGHTS	(Lot 6) 32 Main Street BALGOWAN	Septic and Soakage	11	410126	10 April 2017	Ryan Earthmoving
050/019/2017	PJ and MV Webber 10 Shannon Terrace MAITLAND	(Lot 10) 17 Beaulah Avenue MAITLAND	CWMS Connection	11	434282	10 April 2017	PJ Webber
050/020/2017	Yorke Peninsula Council PO Box 57 MAITLAND	(PTS 482) (Site 40) 1 Park Terrace ARDROSSAN	CWMS Connection	WITHDRAWN	59	12 April 2017	NA

Yorketown

Septic App. No.	Owner	Location	Proposal	Conditions	Assess. No	Decision Date	Plumber & Licence No
050/120/2016	A & E Hewitt 19 Valleyview Court HACKHAM WEST	(Lot 43) 11 Lantana Court STANSBURY	Sewer Connection	11	418814	21 April 2017	Owner Applicant
050/010/2017	J May & M Wyles 22 Roslyn Street LARGS BAY	(Sec 1161) 5 Gull Street MARION BAY	Septic & Soakage	11	120865	31 March 2017	Longridge Group

DEBATE

AGENDA

DIRECTOR CORPORATE AND COMMUNITY SERVICES

DA/ITEM 6.2

1. FINANCIAL REPORT AS AT 30th APRIL 2017

PURPOSE

For Council to consider the financial report and capital projects update report as at 30th April 2017.

RECOMMENDATION

That Council receive the financial report and capital projects update report as at 30th April 2017.

LINK TO STRATEGIC PLAN

Goal: 5 Responsible Governance

Strategy: 5.1 Openness and transparency of reporting Council's performance

5.2 Effective leadership and informed decision making

BACKGROUND

A Financial report and a Capital Projects Update report (projects over $25,000) is presented monthly for Council's consideration in accordance with Policy PO142 Budget Reporting and Amendment. These reports encompass results to the end of each calendar month preceding each scheduled Council meeting.

DISCUSSION

The attached financial reports are submitted with the following qualifications, comments and notes:

- Actuals included in the Uniform Presentation of Finances (UPF) are as incurred at close of business on the last day of the month being reported and may be subject to end of month adjustments. Any such adjustments will be incorporated in the following monthly report.
- The reports do not include year-end income and expense accruals.
- Both reports include year to date Commitments i.e. orders raised but not yet paid for.
- **Attachment 1 - Uniform Presentation of Finances**
    - Note 1 – Rates, Service Charges (Waste, CWMS and Water), NRM Levy and Rate Rebates, totalling approximately $21.2M, have been raised for the entire 2016/17 financial year but are due and payable either in full in September 2016 or by quarterly instalments in September 2016, December 2016, March 2017 and June 2017.
    - Note 1 - Grants, Subsidies & Contributions of $3.9M received to date.
    - Note 1 – dog registration income totalling approximately $77K have been collected.

- Note 1 – income from building and planning activity of approximately $148K and septic tank registration fees of approximately $30K is included.
- Note 1 – also included here are approximately $465K of reimbursements and miscellaneous income.
- Note 1 - $2.8M collected for user charges (boat ramp, caravan parks, refuse disposal etc) are included in the total income.
- Note 2 – the following major expenditure majority of which has been paid in advance for the 2016/17 financial year as per the required payment terms included in the figures is:
  - Insurance - $886K;
  - Memberships/Subscriptions/Contributions/Donations - $342K;
  - Licence Fees - $192K;
  - Plant & Equipment Registration - $109K.
- Note 2 – commitments of approximately $1.8M include orders worth approximately $730K remaining for waste management and refuse collection and disposal services in 2016/2017.
- Note 2 – finance costs (bank fees & charges and interest on loans) of approximately $301K are included.
- Note 2 – depreciation for ten (10) months of the financial year based on up to date asset information including revaluations, capitalisation of assets and removal of residual values in 2015/2016 and finalisation of General Purpose Financial Statements, has been included in the YTD expenditure. The budget was adjusted in the December quarterly review to reflect the full year forecast.
- Notes 3 & 4 – commitments of approximately $2.7M for various capital projects, details of which can be found in Attachment 2 of this report.

- **Attachment 2 – Capital Projects Update Report**
  - All Year to Date expenditure in this report includes invoices paid to date and orders outstanding. The total of this amount is then compared against the current budget to provide the budget remaining.
  - It should be noted that the month end balances in the capital report are different to those in Attachment 1 – UPF. This is due to the UPF reflecting the actuals as at the last day of the month, whereas the capital report includes some month end adjustments, correction to existing purchase orders and raising of new ones, backdated journals and correction of incorrectly allocated amounts. Making these adjustments means the report shows expenditure incurred as well as expenditure forecast for the remainder of the year along with budget remaining against each project.

COMMUNITY ENGAGEMENT PLAN

Not applicable

CONSULTATION PROCESS

In preparing this report, the following Yorke Peninsula Council officers were consulted:

- Corporate Management Team
- Manager Financial Services
- Budget and Project Managers

- Accountant – Financial Management
- Accountant – Financial Operations

In preparing this report, the following External Parties were consulted:

- Nil

POLICY IMPLICATIONS

PO 142 Budget Reporting and Amendment Policy

BUDGET AND RESOURCE IMPLICATIONS

This is the tenth update since the endorsement of Council's 2016/2017 Adopted Budget in July 2016. With two (2) months of the financial year remaining, financial performance at this stage remains on track against the revised budget. Elected Members should note that the third quarterly review of Council's 2016/2017 budget has been completed and is being considered by Elected Members at the May 2017 meeting. The attached reports do not reflect adjustments proposed in the third quarterly budget review.

Expenditure on capital projects is continuing to increase as a number of projects carried forward from 2015/2016 are complete and current year projects near completion. It should be noted that all Roads to Recovery funded road projects have now been completed and funding was received in full in December 2016. The first claim for $721,411 submitted against Special Local Roads funding for Clinton Road has now been paid. A final claim for the remainder of the funds ($1,274,589) has been submitted in April 2017 with payment expected before the end of this financial year.

RISK/LEGAL/LEGISLATIVE IMPLICATIONS

Monthly financial reporting provides a transparent and comprehensive reporting regime that allows Council to track performance against financial targets established in its annual budget.

Council risks being seen as not being transparent if financial performance is not reported periodically and Elected Members could be asked to make decisions without knowing the impact on Council's financial position.

There is a significant risk that non-achievement on agreed milestones for grant funded capital projects could result in a delay in Council receiving grant funds, not receiving funds or having to return funds already received. This would have a significant negative impact on Council's budget and cash flow.

Local Government Act 1999

Local Government (Financial Management) Regulations 2011

ATTACHMENTS

Attachment 1: Uniform Presentation of Finances as at 30th April 2017

Attachment 2: Capital Projects Update as at 30th April 2017

YORKE PENINSULA COUNCIL
UNIFORM PRESENTATION OF FINANCES
AS AT 30TH APRIL 2017

	2016/17 YTD Actuals $'000	2016/17 Commitments $'000	2016/17 YTD Expenditure (incl Commitments) $'000	Notes	2016/17 Full Year Revised Budget $'000	2016/17 Full Year Budget Revisions $'000	2016/17 Full Year Adopted Budget $'000
Income	28,800		28,800	1	30,119	2,032	28,087
Less Expenses	23,995	1,809	25,804	2	31,515	737	30,778
Operating Surplus/ (Deficit) before Capital Amounts	**4,805**	**1,809**	**6,615**		**(1,396)**	**2,769**	**(2,691)**
Less Net Outlays on Existing Assets							
Capital Expenditure on renewal and replacement of Existing Assets	6,088	1,254	7,342	3	8,671	2,644	6,027
Less Depreciation, Amortisation and Impairment	(7,884)		(7,884)		(9,391)	(316)	(9,075)
Less Proceeds on Sale of Assets	(255)		(255)		(363)		(363)
	(2,051)	**1,254**	**(797)**		**(1,083)**	**2,328**	**(3,411)**
Less Net Outlays on New and Upgraded Assets							
Capital Expenditure on New and Upgraded Assets	1,948	1,462	3,410	4	5,288	696	4,592
Less Amounts received specifically for New and Upgraded Assets	(721)		(721)		(2,062)	1,852	(3,914)
Less Proceeds for Sale of Surplus Assets							
	1,227	**1,462**	**2,688**		**3,226**	**2,548**	**678**
NET(LENDING) / BORROWING FOR FINANCIAL YEAR	**5,629**	**(906)**	**4,723**		**(3,539)**	**(2,107)**	**42**

Yorke Peninsula Council
Monthly Capital Projects Update
as at 30 April 2017

PROJECT DETAILS BY ASSET CLASS	Responsible Directorate	Expected Finish Date	Project Management Stages Complete						YTD Expenditure (incl Commitments) ($)	Total Revised Budget ($)	Budget Remaining ($)	Budget Remaining (%)	Comments
			LEGEND										
** Only projects $25,000 and greater are individually listed below, however the totals shown are for the entire asset class.			1		Activity currently **completed** or **on** schedule								
			2		Activity currently **upto 2 months behind** schedule								
			3		Activity currently **more than 2 months behind** schedule								
			0		Activity currently **not started**								
			NA		Activity **not applicable** to the project								
			Planning	Design	Approvals	Services	Procurement	Delivery	$10,596,179	$13,959,433	$3,363,254	24%	TOTAL
Buildings & Other Structures													
40081 - Minlaton Depot Office/ Lunchroom Extension	AIS	Dec-16				NA			$103,838	$100,000	-$3,838	-4%	Original project completed, budget adjustment undetaken at 3rd quarter to cater for further works outside the scope of original project.
45040 - Ardrossan Jetty Shelters	AIS	Jun-17				NA			$37,786	$40,000	$2,214	6%	Contractor engaged in March, anticipate completion prior to year end.
45816 - Price Playground Unisex Disabled Toilets	AIS	Dec-16							$40,880	$45,003	$4,123	9%	Completed.
57519 - Minlaton Town Hall - Storage Shed	CCS	Mar-17							$0	$25,000	$25,000	100%	Development approval granted, contractor to be engaged in May.
57520 - Minlaton Town Hall Capital	DS	Jun-17			NA	NA			$42,870	$48,000	$5,130	11%	Completed.
60107 - Port Vincent Caravan Park - New Cabin	CCS	Jun-16							$208,978	$196,390	-$12,588	-6%	Budget carried forward from 2015/16. Order raised with supplier early April, budget adjustment undertaken at 3rd quarter budget review.
60302 - Marion Bay Caravan Park - New Cabins	CCS	Jun-16							$261,723	$346,880	$85,157	25%	Budget carried forward from 2015/16. Deposit paid. Delivery expected in May 2017.
60314 - Point Turton Caravan Park- New Cabins	CCS	Jun-16							$0	$391,435	$391,435	100%	Budget carried forward from 2015/16. Tender evaluation panel recommendation is to re-tender as a new project.
Total Buildings & Other Structures									**$742,656**	**$1,240,163**	**$497,507**	**40%**	
CWMS Infrastructure													
44250 - Ardrossan CWMS	AIS	Jun-17			NA	NA			$0	$55,000	$55,000	100%	Assessing quotations prior to commencement, project on track for completion before year end.
44254 - Maitland CWMS	AIS	Jun-17			NA	NA			$78,532	$65,000	-$13,532	-21%	Completed, budget adjustment undertaken at 3rd quarter budget review.
44255 - Port Victoria CWMS	AIS	Feb-17			NA	NA			$38,430	$39,592	$1,162	3%	Completed.
44258 - Black Point CWMS	AIS	Feb-17			NA	NA			$51,150	$55,000	$3,850	7%	Completed.
44260 - Port Vincent CWMS	AIS	Apr-17			NA	NA			$45,065	$65,000	$19,935	31%	Installation of equipment in progress, anticipate completion in May.
44263 - Sultana Point CWMS	AIS	Feb-17			NA	NA			$26,912	$29,000	$2,089	7%	Delay due to contractor availability, anticipated completion revised to May 2017.
44264 - Point Turton CWMS	AIS	Jun-17				NA			$61,695	$262,450	$200,755	76%	Project commenced, will need to revise completion date for after June 2017.
Total CWMS Infrastructure									**$333,105**	**$601,805**	**$268,700**	**45%**	
Minor Plant													
40050 - Equipment - Minor Plant	AIS	Jun-17		NA	NA	NA			$32,870	$30,000	-$2,870	-10%	Completed, budget adjusted at third quarter.
Total Minor Plant									**$32,870**	**$30,000**	**-$2,870**	**-10%**	
Other Assets													
40014 - Grant Funded Community Projects	ES	Jun-17		NA	NA	NA			$0	$25,000	$25,000	100%	$10k used for Pine Point post office contribution as per Council decision
40025 - Business Improvement Capital - General	ES	Jun-17		NA	NA	NA			$0	$25,000	$25,000	100%	Reviewing GPS tracking on Council fleet vehicles.
40027 - Finance Capital Projects	CCS	Jun-17			NA	NA			$0	$30,000	$30,000	100%	Nil at this stage
40030 - Equipment - Computer	CCS	Jun-17		NA	NA	NA			$98,242	$144,800	$46,558	32%	Intranet project underway, rolling IT replacement program on schedule.
44622 - Edithburgh Boat Ramp extension	AIS	Dec-16				NA			$86,264	$85,000	-$1,264	-1%	Development approval granted by Development Assessment Commission, anticipate project completion next financial year.
44623 - Ardrossan Boat Ramp Carpark Re-Seal	AIS	Jun-17			NA	NA			$21,545	$25,000	$3,455	14%	Completed. Budget adjustment undertaken at third quarter.
44624 - Port Victoria Boat Ramp Extensions	AIS	Jun-17				NA			$13,628	$27,000	$13,372	50%	Completed, progress has paid for a portion of this project directly.
44625 - Edithburgh Swimming/ Tidal Pool Upgrade	AIS	Jun-17				NA			$40,350	$84,000	$43,650	52%	Wall repair work complete, sourcing quotes for fencing.
44656 - Marion Bay Boating Facility	ES	Jun-16			NA	NA			$52,200	$100,000	$47,800	48%	Project and subsequent budget carried forward from 2015/16. Reference group reviewing draft concept design report in May, for June Council meeting and/or workshop.
45041 - Point Turton Nature Play Playground	AIS	Jun-17							$3,046	$40,000	$36,954	92%	Grant approval process and announcements delayed till June.
45790 - Minlaton Township Concept Plan	DS	Jun-16			NA	NA			$0	$30,000	$30,000	100%	Project and subsequent budget carried forward from 2015/16. Grant application lodged - project feasibility pending grant funding response.
45791 - Port Rickaby Concept Plan	CCS	Mar-17			NA	NA			$21,211	$50,000	$28,789	58%	In discussion with consultant regarding final specifications prior to formal engagement.
60050 - Council Caravan Parks Capital - Other	CCS	Jun-17							$42,082	$70,000	$27,918	40%	Remaining typographical surveys to be finalised prior to end of financial year.
60100 - Port Vincent Caravan Park Capital - General	CCS	Dec-16			NA	NA			$86,253	$87,900	$1,647	2%	Final works scheduled for May following peak season.
60300 - Marion Bay Caravan Park Capital - General	CCS	Jun-17			NA	NA			$21,388	$36,200	$14,812	41%	Balance to be spent in May on 100,000 litre water tank as part of cabin replacement project.
60410 - Bush Camping - Capital	DS	Jun-16				NA			$53,436	$104,409	$50,973	49%	Project and subsequent budget carried forward from 2015/16. Waiting development approval on some of the remaining projects, materials ordered for others.
Total Other Assets									**$649,485**	**$1,107,112**	**$457,627**	**41%**	

Yorke Peninsula Council
Monthly Capital Projects Update
as at 30 April 2017

PROJECT DETAILS BY ASSET CLASS	Responsible Directorate	Expected Finish Date	Project Management Stages Complete						YTD Expenditure (incl Commitments) ($)	Total Revised Budget ($)	Budget Remaining ($)	Budget Remaining (%)	Comments
			Planning	Design	Approvals	Services	Procurement	Delivery	$10,596,179	$13,959,433	$3,363,254	24%	TOTAL
Plant & Equipment													
61200 - Fleet Vehicles	CCS	Jun-17		NA	NA	NA			$342,406	$398,000	$55,594	14%	Two vehicles currently on order. Anticipate to make further fleet purchase in June.
62001 - Construction Grader Purchase	AIS	Jun-17		NA	NA	NA			$379,000	$405,000	$26,000	6%	Order placed, anticpate delivery in May 2017. Budget adjusted at 3rd quarter to enable bringing forward of utility purchases scheduled for 2017/18.
62002 - Patrol Grader Purchase	AIS	Jun-17		NA	NA	NA			$351,000	$378,000	$27,000	7%	Completed. Budget adjusted at 3rd quarter to enable bringing forward of utility purchases
62003 - Tractor Purchase	AIS	Jun-17		NA	NA	NA			$0	$125,000	$125,000	100%	Tender evaluation panel recommendations to go to the May Council meeting.
62004 - Tractor (Slasher) Purchase	AIS	Jun-17		NA	NA	NA			$63,600	$70,000	$6,400	9%	Completed. Budget adjusted at 3rd quarter to enable bringing forward of utility purchases
62005 - Forklift Purchase	AIS	Jun-17		NA	NA	NA			$24,213	$25,000	$787	3%	Completed. Budget adjusted at 3rd quarter to enable bringing forward of utility purchases
62006 - Towed Trailer Broom	AIS	Jun-17		NA	NA	NA			$0	$45,000	$45,000	100%	Quotation evaluation to be undertaken in early May, with order to be placed in May.
62007 - Skid Steer Trailer Purchase	AIS	Jun-17		NA	NA	NA			$0	$38,000	$38,000	100%	Quote to be assessed in May, project scope adjusted to incorporate purchase of new slasher and modification of existing trailer.
Total Plant & Equipment									**$1,160,219**	**$1,484,000**	**$323,781**	**22%**	
Road Infrastructure													
49040 - Footpath - Edith Street Edithburgh	AIS	Dec-16	NA	NA	NA	NA			$42,166	$45,000	$2,834	6%	Completed. Budget adjustment undertaken at 3rd quarter budget review.
49499 - Upgrade Shoulders on Sealed Roads	AIS	Jun-17		NA	NA	NA			$250,000	$250,000	$0	0%	Contractor engaged work to commence in May to be completed before year end.
49500 - Reseal Allocation	AIS	May-17		NA	NA	NA			$241,065	$500,000	$258,935	52%	Rehabitiliation phase underway, final order to be placed in May with work to be completed prior to year end.
53518 - Unsealed - North Coast Road	AIS	Jun-16							$837,756	$838,564	$808	0%	Completed.
53519 - Unsealed - South Coast Road	AIS	Jun-17			NA	NA			$0	$133,931	$133,931	100%	Anticipated to commence in May as per rolling road construction program.
53521 - Daly Head Road	AIS	May-17			NA	NA			$0	$126,900	$126,900	100%	Commenced in April as per rolling road construction program.
53522 - Unsealed - Waterloo Bay Road	AIS	Apr-17			NA	NA			$118,287	$124,977	$6,690	5%	Completed, final wages and plant hire to be allocated.
53523 - Unsealed - Cut-Line Road	AIS	Dec-16			NA	NA			$127,189	$121,026	-$6,163	-5%	Completed.
53540 - Unsealed - Gun Club Road	AIS	Mar-17			NA	NA			$62,546	$60,648	-$1,898	-3%	Completed.
53545 - Unsealed - Sheoak flat road (Section)	AIS	Sep-16			NA	NA			$56,605	$56,605	$0	0%	Completed.
54008 - Unsealed - Brutus Road	AIS	May-17			NA	NA			$53,452	$133,640	$80,187	60%	Work commenced in March as per rolling road construction program.
54027 - Unsealed - Nalyappa Road	AIS	Jun-17			NA	NA			$0	$150,003	$150,003	100%	Preliminary work has commenced, project completion dependent on weather and progress on Clinton Road.
54030 - Unsealed - Dump Road	AIS	Oct-16			NA	NA			$111,543	$111,543	$0	0%	Completed.
54035 - Unsealed - Weavers Road North	AIS	Dec-16			NA	NA			$132,528	$132,528	$0	0%	Completed.
54078 - Unsealed - North South Road	AIS	Jun-17			NA	NA			$322,017	$322,017	$0	0%	Completed.
54092 - Unsealed - Old Coast Road	AIS	Sep-16			NA	NA			$109,021	$109,062	$41	0%	Completed.
54093 - Unsealed - McCauley Road	AIS	Jun-17			NA	NA			$314,085	$314,085	$0	0%	Completed.
54094 - Unsealed - Old Port Vincent Road	AIS	Oct-16			NA	NA			$112,058	$112,057	$0	0%	Completed.
54096 - Unsealed - Wattle Point Road	AIS	Mar-17			NA	NA			$132,111	$144,301	$12,191	8%	Completed. Budget adjustment required at 3rd quarter budget review.
54097 - Unsealed - Harmer Road	AIS	Jun-17			NA	NA			$37,230	$37,190	-$40	0%	Completed.
57063 - Sealed - Clinton Road	AIS	Jun-17			NA				$2,069,578	$2,994,629	$925,051	31%	Construction underway and on track for completion.
57108 - Corny Point Road	AIS	Jun-16			NA	NA			$783,928	$783,602	-$326	0%	Completed.
57109 - Patch Sheeting	AIS	Jun-16			NA	NA			$299,467	$299,468	$1	0%	Completed.
57521 - Osprey Road, Port Julia	AIS	Jun-17			NA	NA			$16,100	$29,000	$12,900	44%	Project commenced in February as per rolling road construction program.
57522 - Pine Point Road (Hastings rd- James Well rd	AIS	Jun-17			NA	NA			$331,996	$331,996	$0	0%	Completed.
57523 - Pine Point Road (Yorke HWY- St Vincnet HW	AIS	Jun-17			NA	NA			$713,872	$713,872	$0	0%	Completed.
59428 - Footpath - Robert Street - Maitland	AIS	Dec-16			NA	NA			$26,300	$40,988	$14,688	36%	Project and subsequent Budget ($5,991) carried forward from 2015/16. Final work now to be undertaken in-house.
59445 - Minlaton District School Carpark	AIS	Nov-16			NA	NA			$19,063	$35,263	$16,200	46%	Completed, budget adjustment to be undertaken at 3rd quarter budget review.
Total Road Infrastructure									**$7,380,581**	**$9,129,886**	**$1,749,305**	**19%**	
Stormwater Infrastructure													
57110 - High Street - Balgowan Stormwater Kerbing	AIS	Mar-17			NA	NA			$106,028	$143,007	$36,979	26%	Project commenced in April for anticipated completion in May.
59437 - Stormwater - Yorketown Consultancy	AIS	2014	NA	NA		NA			$107,327	$118,060	$10,733	9%	Property due to settle on 5th May 2017.
59440 - Ardrossan Stormwater Harvest Project	AIS	Jun-18							$51,947	$73,500	$21,553	29%	Contractor engaged, materials on order. Only part budget in 16/17, balance in 17/18.
Total Stormwater Infrastructure									**$285,882**	**$355,085**	**$69,203**	**19%**	
Water Scheme Infrastructure													
Total Water Scheme Infrastructure									**$11,382**	**$11,382**	**$0**	**0%**	

LEGEND		
1		Activity currently **completed** or **on** schedule
2		Activity currently **upto 2 months behind** schedule
3		Activity currently **more than 2 months behind** schedule
0		Activity currently **not started**
NA		Activity **not applicable** to the project

***** Only projects $25,000 and greater are individually listed below, however the totals shown are for the entire asset class.***

DIRECTOR CORPORATE AND COMMUNITY SERVICES

DA/ITEM 6.2

2. 2016/2017 MARCH QUARTERLY BUDGET REVIEW

PURPOSE

To consider and adopt a review of Council's 2016/2017 Budget and associated financial statements and ratios.

RECOMMENDATION

That Council endorse the March 2017 Budget Review changes as presented in the attached Summary of Changes, Uniform Presentation of Finances and Statement of Comprehensive Income and receive the updated Statement of Financial Position, Statement of Cash Flows, Statement of Changes in Equity and Financial Indicators (Ratios) reports.

LINK TO STRATEGIC PLAN

Goal: 5 Responsible Governance

Strategy:
- 5.1 Openness and transparency of reporting Council's Performance
- 5.2 Effective leadership and informed decision making
- 5.3 Meet all legislative requirements and compliance with Council's internal controls
- 5.5 Undertake effective risk management

BACKGROUND

Regulation 9(1) (b) of the Local Government (Financial Management) Regulations 2011 requires that Council undertake one comprehensive budget review each financial year. This review must include preparation of four principal financial statements (excluding notes) and show a revised full year forecast of each item in the budgeted financial statements compared to estimates set out in the original budget.

Council's policy PO142 Budget Reporting and Amendment requires quarterly budget reviews i.e. September, December and March. This means Council undertakes two (2) additional budget reviews than required by the Regulations. This is the third (final) of the three (3) quarterly budget reviews for the 2016/2017 financial year.

DISCUSSION

Budget managers in all directorates have completed a review of their 2016/2017 budgets as at 31st March 2017 and all adjustments allowed in accordance with policy PO142 have been included in the attached Statements (refer attachments 1 - 7).

Budgets have been reviewed taking the following into consideration:-

- Additional income likely to be generated or received

- New grants and contributions
- Changes to user and statutory fee income forecasts
- Review of staffing levels to those originally budgeted
- Changes due to amendments in legislation
- Changes to Government fees and charges
- Council decisions made between adoption of the original budget and 31st March 2017
- Status of capital projects taking into account projects carried forward from 2015/2016 for completion in the current financial year (refer previous Council decision in August 2016)
- Income and expenditure to date and forecasts for the remainder of the year

A list of adjustments with reasons for the changes is attached to this report (refer Attachment 1).

Budgeted Operating Surplus/ (Deficit)

As a result of the 3rd quarterly budget review (QBR 3) and subsequent adjustments proposed, Council's forecast Operating Deficit for the 2016/2017 financial year is $1.46m, which is a net increase of $64k to the forecast in the 2nd Quarterly Budget Review (December QBR 2) and a net decrease of $1.23m to the forecast in the 2016/2017 adopted budget. While the net increase of $64k to the Operating bottom line (and subsequently Council's forecast Operating Surplus Ratio) is due to various adjustments (refer Attachment 1), major adjustments are highlighted as follows:-

- **Building and planning income – unfavourable impact -** $50k reduction to December QBR forecast due to drop in applications.
- **Bush camping income – favourable impact -** $20k increase to budget based on YTD income received and forecast income for the remainder of the year.
- **Foreshore grants income – unfavourable impact –** three (3) grants worth $20k each not being received, hence they have been removed from the budget.
- **Yorketown Aerodrome grant – favourable impact -** $20k of a total grant of $81k received in 2016/2017, hence it has been brought into the budget. Remainder of the grant will be received in 2017/2018. Capital project has been budgeted in 2017/2018.
- **Insurance reimbursement income – favourable impact -** $63k insurance claim for damage as a result of May 2016 storms settled in April 2017.
- **Program Property Services contract expenditure – favourable impact –** contractual maintenance for halls commencing in 2017/2018, hence $38k removed from budget to fund unfavourable impacts on budget.
- **Jetties maintenance expenditure – unfavourable impact -** $32k increase to budget to fund additional maintenance and works on Jetties.
- **Depreciation expenditure – unfavourable impact -** $70k increase to forecast depreciation to correct reduction of the same amount due to projects carried forward from 2015/2016. This adjustment was not made previously resulting in forecast deprecation to be inaccurate.

More detailed information on the changes to Council's proposed Operating Deficit (and income and expenditure budgets) is available in the Updated Statements in particular the Budgeted Statement of Comprehensive Income (refer Attachment 3) and also in Attachment 1.

Budgeted Capital Expenditure

Council's forecast capital expenditure after the proposed third quarterly (final) budget review adjustments is $13.97m. This includes the initially adopted budget of $10.62m to which carry forward projects adopted by Council worth $4.06m were added in August 2016 and adjustments of $49k and $766k were made at QBR 1 and QBR 2, respectively. A net increase of $3k is proposed in QBR 3, details of which can be found in the Updated Statements in particular the Budgeted Statement of Cash Flows (refer Attachment 5) and also in Attachment 1.

Of the proposed budget of $13.97m, $8.69m is budgeted to be spent on renewal and replacement of existing assets, which is an increase of $2.39m to Council's adopted budget due mainly to carry forward projects.

Budgeted Cash Flow & Net Lending/ (Borrowing)

Following the proposed adjustments in QBR 3, Council's forecast closing cash and cash equivalents as at 30th June 2017 is $3.54m which is a decrease of $113k to the forecast at QBR 2. It should be noted that Council's cash flow has been adjusted for the $209k being the loan approved by Council for the Chinaman Seawall project and the subsequent payment of the same amount to the shack owners group.

The forecast end of year Net Lending/ (Borrowing) is a net borrowing amount of $3.54m, slightly less than QBR 2.

More detail on the movements in net lending/ (borrowing) for the financial year can be found in the Budgeted Uniform Presentation of Finances (refer Attachment 2).

Budgeted Financial Indicators (Ratios)

Operating Surplus Ratio – forecast is (4.8%), an increase of 0.2% compared to QBR 2 and a 4.8% reduction compared to the adopted budget ratio of (9.6)%. This ratio continues to be below the industry minimum target of breakeven or 0%.

Net Financial Liabilities Ratio - as a result of proposed changes in this budget review, this ratio is forecast to decrease to 21.6% when compared to Council's adopted forecast of 24.5%. This decrease is due to the various adjustments in previous budget reviews and proposed in this budget review and its impact on forecast cash and cash equivalents and total operating income.

This ratio remains well below the industry ceiling of 100% and gives Council the ability to consider future borrowings for capital renewal expenditure provided Operating Income levels are sufficient to cover borrowing costs.

Asset Sustainability Ratio – forecast to be 88% for 2016/2017 if all capital renewal projects are completed as budgeted and deprecation is not significantly different to that forecast. Originally this was forecast to be 62%, however, carry forward projects from 2015/2016 resulted in an increase to 99% before changes in QBR 1 and 2 and proposed changes in QBR 3 have reduced this forecast to 88%.

The forecast ratio remains just below the industry minimum target of 90%, however, it should be noted that approximately 37% of this ratio is a result of capital renewal projects budgeted in 2015/2016 but not completed in that year. As a result those projects were carried forward for completion to 2016/2017 reducing the ratio for 2015/2016 and increasing the forecast ratio in the current financial year. This is likely to be a one-off occurrence which has extraordinarily inflated the ratio in 2016/2017.

More information on Council's Financial Indicators can be found in Attachment 7.

COMMUNITY ENGAGEMENT PLAN

Level 1 Inform – Included in Council meeting agenda and minutes which are published on Council's website

CONSULTATION PROCESS

In preparing this report, the following Yorke Peninsula Council officers were consulted:

- Corporate Management Team
- Manager Financial Services
- Budget Managers
- Accountant – Financial Management
- Accountant – Financial Operations

In preparing this report, the following External Parties were consulted:

- Nil

POLICY IMPLICATIONS

PO142 Budget Reporting and Amendment Policy

BUDGET AND RESOURCE IMPLICATIONS

Budget and resource implications are as detailed in this report and as presented in the attached financial statements and indicators.

RISK/LEGAL/LEGISLATIVE IMPLICATIONS

Council's budget is a fundamental instrument of accountability and an essential pre-requisite to deciding the annual rate impost on the community. As such it is important that material variations compared with the original budget be disclosed and explained.

Local Government Act 1999

Local Government (Financial Management) Regulations 2011

ATTACHMENTS

Attachment 1: Proposed Summary of Changes – 3rd Quarter (March) Budget Review 2016/2017

Attachment 2: Budgeted Uniform Presentation of Finances 2016/2017

Attachment 3: Budgeted Statement of Comprehensive Income 2016/2017

Attachment 4: Budgeted Statement of Financial Position 2016/2017

Attachment 5: Budgeted Statement of Cash Flows 2016/2017

Attachment 6: Budgeted Statement of Changes in Equity 2016/2017

Attachment 7: Budgeted Financial Indicators (Ratios) 2016/2017

YORKE PENINSULA COUNCIL
2016/17 BUDGET
PROPOSED SUMMARY OF CHANGES - 3RD QUARTER (MARCH) BUDGET REVIEW

Type	Note #	Amount Increase/ (Decrease)	Reason for Variance
OPERATING INCOME			
Rates	1	-$ 9,000	Legal and other charges reimbursement not expected as all debt recovery undertaken in house
Statutory Charges	2	-$ 20,800	Building and Planning income forecast reduced based on YTD income and drop in applications
Statutory Charges	3	-$ 7,500	Septic tank application and inspection income reduced based on YTD income and drop in applications
Statutory Charges	4	-$ 15,000	Open space developer contributions budgeted but not expected to be received
Statutory Charges	5	-$ 7,818	Minor adjustments (individually less than $5k) across several budget lines to reflect income to date & forecast for remainder of the year
User Charges	6	$ 20,000	Bush camping income increased based on YTD income and forecast for remainder of the year
User Charges	7	$ 4,000	Minor adjustments (individually less than $5k) across several budget lines to reflect income to date & forecast for remainder of the year
Grants, Subsidies and Contributions	8	-$ 60,000	Foreshore grants (3 x $20k) initially budgeted, not being received
Grants, Subsidies and Contributions	9	$ 14,863	Additional income for traineeships received. Not budgeted previously
Grants, Subsidies and Contributions	10	$ 20,000	Yorketown Aerodrome airstrip renewal project portion of grant income received in 2016/17. Project budgeted for completion in 2017/18.
Grants, Subsidies and Contributions	11	-$ 863	Minor adjustments (individually less than $5k) across several budget lines to reflect income to date & forecast for remainder of the year
Reimbursements	12	$ 62,973	Insurance claim settled in April 2017 for damage due to May 2016 storms
Reimbursements	13	$ 15,250	Traineeship funding reimbursements not originally budgeted
Reimbursements	14	$ 1,777	Minor adjustments (individually less than $5k) across several budget lines to reflect income to date & forecast for remainder of the year
Other Income	15	-$ 1,000	Minor adjustments (individually less than $5k) across several budget lines to reflect income to date & forecast for remainder of the year
OPERATING EXPENDITURE			
Employee costs	16	-$ 10,000	LSL provision reduced in line with 2015/16 year end result
Employee costs	17	-$ 12,000	Transferred to contracts budget line to fund temp staff costs used to fill vacancy
Employee costs	18	$ 4,000	Minor adjustments (individually less than $5k) across several budget lines to reflect expenditure to date & forecast for remainder of the year
Materials, contracts & other expenses	19	$ 12,000	Budget allocation for temp staff costs used to fill vacancy. Also refer to note 17.
Materials, contracts & other expenses	20	$ 32,000	Budget increased to fund additional maintenance and works on Jetties
Materials, contracts & other expenses	21	$ 30,000	Allocation of budget for works undertaken as a result of May 2016 storms. Funded by insurance claim. Also refer to note 12.
Materials, contracts & other expenses	22	-$ 38,000	Program property services contract for halls not commencing this year. Budget reduced to fund other budget lines.
Materials, contracts & other expenses	23	-$ 10,665	Funds transferred to capital budget for emergency safety lighting upgrade at Ardrossan hall
Materials, contracts & other expenses	24	$ 9,665	Minor adjustments (individually less than $5k) across several budget lines to reflect expenditure to date & forecast for remainder of the year
Depreciation	25	$ 70,000	Increase to correct adjustment made as a result of carry forward projects from 2015/16. This adjustment was not made previously resulting in forecast depreciation to be inaccurate.

YORKE PENINSULA COUNCIL
2016/17 BUDGET
PROPOSED SUMMARY OF CHANGES - 3RD QUARTER (MARCH) BUDGET REVIEW

Type	Note #	Amount Increase/ (Decrease)	Reason for Variance
Finance Costs	26	-$ 6,300	Bank charges and fees forecast to be lower than budgeted
CAPITAL EXPENDITURE - RENEWAL			
Buildings & Other Structures	27	$ 10,665	Emergency safety lighting upgrade at Ardrossan Hall not initially budgeted. Funded from budget in operating. Also refer to note 23.
Buildings & Other Structures	28	$ 3,430	Minor adjustments (individually less than $5k) to reflect expenditure to date, forecast expenditure and completion of projects.
CWMS Infrastructure	29	$ 13,500	Maitland CWMS budget increased to cover over expenditure due to additional work. Funded from savings in Port Vincent CWMS capital budgets.
CWMS Infrastructure	30	-$ 7,068	Minor adjustments (individually less than $5k) to reflect expenditure to date, forecast expenditure and completion of projects.
Minor Plant	31	-$ 9,630	Reallocated to new/ upgrade capital expenditure to fund purchases
Minor Plant	32	$ 2,870	Minor adjustments (individually less than $5k) to reflect expenditure to date, forecast expenditure and completion of projects.
Other Assets	33	$ 15,000	Yorketown Aerodrome airstrip renewal project plans/design undertaken in 2016/17. Project budgeted for completion in 2017/18.
Other Assets	34	-$ 10,000	Budget for Cemeteries database project transferred from capital to operating to reflect costs incurred
Other Assets	35	$ 7,750	Landfill rehabilitation not originally budgeted
Other Assets	36	$ 4,528	Minor adjustments (individually less than $5k) to reflect expenditure to date, forecast expenditure and completion of projects.
Plant & Equipment	37	$ 55,000	Replacement of 2 x depot utes not originally budgeted. Savings found in 2016/17 budget to bring forward replacement that was budgeted for in 2017/18 proposed budget.
Plant & Equipment	38	-$ 60,187	Savings in budget for purchase of 2 x graders, tractor and forklift. Used to fund 2 x depot ute replacements. Also refer to note 36.
Plant & Equipment	39	$ 787	Minor adjustments (individually less than $5k) to reflect expenditure to date, forecast expenditure and completion of projects.
Road Infrastructure	40	-$ 15,906	Minlaton school car park project completed below allocated budget.
Road Infrastructure	41	$ 10,000	South coast road contractual budget increased to reflect cost of completion
Road Infrastructure	42	$ 6,263	Daly head road wages budget increased to reflect cost of completion. Funded from reduction in other capital budget lines.
Road Infrastructure	43	-$ 8,696	Part of Nalyappa road wages budget transferred to other capital budget lines to fund overruns
Road Infrastructure	44	-$ 12,870	Osprey Road Port Julie contractual budget reduced to reflect actual cost of completion
Road Infrastructure	45	$ 9,996	Minor adjustments (individually less than $5k) to reflect expenditure to date, forecast expenditure and completion of projects.
CAPITAL EXPENDITURE - NEW/UPGRADE			
Buildings & Other Structures	46	$ 8,000	Minlaton depot office extension additional works (kitchen replacement & office furniture) not originally budgeted. Funded from savings on another capital project.
Buildings & Other Structures	47	$ 24,000	Port Vincent caravan park budget for new cabins increased in line with tender price and Council decision. Savings in other caravan park capital projects allocated to fund this.
Buildings & Other Structures	48	-$ 912	Minor adjustments (individually less than $5k) to reflect expenditure to date, forecast expenditure and completion of projects.

YORKE PENINSULA COUNCIL
2016/17 BUDGET
PROPOSED SUMMARY OF CHANGES - 3RD QUARTER (MARCH) BUDGET REVIEW

Type	Note #	Amount Increase/ (Decrease)	Reason for Variance
CWMS Infrastructure	49	-$ 5,000	Port Vincent CWMS capital project budget adjusted to reflect actual cost of completion. Savings transferred to other CWMS capital projects to fund overruns.
CWMS Infrastructure	50	-$ 1,432	Minor adjustments (individually less than $5k) to reflect expenditure to date, forecast expenditure and completion of projects.
Minor Plant	51	$ 9,630	Transferred from renewal capital budget line to fund purchases. Entire original budget allocated against renewal budget line.
Other Assets	52	-$ 15,000	Finance capital project no longer required. Budget removed and allocated to general revenue.
Other Assets	53	$ 6,000	Purchase of data collection equipment for Asset Management. Not initially budgeted, funding provided from Asset Management budget lines.
Other Assets	54	-$ 9,000	Blackpoint caravan and camping ground capital project not going ahead. Funds allocated to Port Vincent new cabins project.
Other Assets	55	-$ 15,000	Point Turton caravan park capital projects not going ahead. Funds allocated to Port Vincent new cabins project.
Other Assets	56	-$ 1,144	Minor adjustments (individually less than $5k) to reflect expenditure to date, forecast expenditure and completion of projects.
Plant & Equipment	57	-$ 787	Minor adjustments (individually less than $5k) to reflect expenditure to date, forecast expenditure and completion of projects.
Road Infrastructure	58	-$ 7,839	Minor adjustments (individually less than $5k) to reflect expenditure to date, forecast expenditure and completion of projects.

YORKE PENINSULA COUNCIL
2016/17 BUDGET
BUDGETED UNIFORM PRESENTATION OF FINANCES

	2016/17 Adopted Budget $('000)	2016/17 Carry Forward Projects Adjustments $('000)	2016/17 September Budget Adjustments $('000)	2016/17 December Budget Adjustments $('000)	2016/17 March Budget Adjustments $('000)	2016/17 Revised Budget $('000)	*2016/17 Notes*
Operating Revenues	28,087	65	122	1,845	17	30,136	*1 - 15*
less Operating Expenses	30,778	213	(20)	544	81	31,596	*16 - 26*
Operating Surplus/(Deficit) before Capital Amounts	**(2,691)**	**(148)**	**142**	**1,301**	**(64)**	**(1,460)**	
Less: Net Outlays on Existing Assets							
Capital Expenditure on Renewal/Replacement of Existing Assets	6,027	3,266	30	(652)	19	8,690	*27 - 45*
less Depreciation, Amortisation & Impairment	9,075	(70)		386	70	9,461	*25*
less Proceeds from Sale of Replaced Assets	363				4	367	
	(3,411)	**3,336**	**30**	**(1,038)**	**(55)**	**(1,138)**	
Less: Net Outlays on New and Upgraded Assets							
Capital Expenditure on New/Upgraded Assets	4,592	791	19	(114)	(12)	5,276	*46 - 58*
less Amounts Specifically for New/Upgraded Assets	3,914			(1,852)		2,062	
less Proceeds from Sale of Surplus Assets	0					0	
	678	**791**	**19**	**1,738**	**(12)**	**3,214**	
Net Lending / (Borrowing) for Financial Year	**42**	**(4,275)**	**93**	**601**	**3**	**(3,536)**	

YORKE PENINSULA COUNCIL
2016/17 BUDGET
BUDGETED STATEMENT OF COMPREHENSIVE INCOME

	2016/17 Adopted Budget $('000)	2016/17 Carry Forward Projects Adjustments $('000)	2016/17 September Budget Adjustments $('000)	2016/17 December Budget Adjustments $('000)	2016/17 March Budget Adjustments $('000)	2016/17 Revised Budget $('000)	*2016/17 Notes*
INCOME							
Rates	21,209			(2)	(9)	21,198	*1*
Statutory Charges	415		10	(25)	(51)	349	*2 - 5*
User Charges	3,115			(18)	24	3,121	*6, 7*
Grants, subsidies, contributions	2,671	50	12	1,905	(26)	4,612	*8 -11*
Investment Income	193					193	
Reimbursements	414		100	(32)	80	562	*12 - 14*
Other Income	70	15		17	(1)	101	*15*
Total Income	**28,087**	**65**	**122**	**1,845**	**17**	**30,136**	
EXPENSES							
Employee costs	8,500		(68)	(17)	(18)	8,397	*16 - 18*
Materials, contracts & other expenses	12,726	283	37	175	35	13,256	*19 -24*
Depreciation	9,075	(70)		386	70	9,461	*25*
Finance Costs	477		11		(6)	482	*26*
Total Expenses	**30,778**	**213**	**(20)**	**544**	**81**	**31,596**	
OPERATING SURPLUS/(DEFICIT) BEFORE CAPITAL AMOUNTS	**(2,691)**	**(148)**	**142**	**1,301**	**(64)**	**(1,460)**	
Net gain/(loss) on disposal or revaluations	10					10	
Amounts specifically for new assets	3,914			(1,852)		2,062	
NET SURPLUS/(DEFICIT)	**1,233**	**(148)**	**142**	**(551)**	**(64)**	**612**	
TOTAL COMPREHENSIVE INCOME	**1,233**	**(148)**	**142**	**(551)**	**(64)**	**612**	

YORKE PENINSULA COUNCIL
2016/17 BUDGET
BUDGETED STATEMENT OF FINANCIAL POSITION

	2016/17 Adopted Budget $('000)	2016/17 Carry Forward Projects Adjustments $('000)	2016/17 September Budget Adjustments $('000)	2016/17 December Budget Adjustments $('000)	2016/17 March Budget Adjustments $('000)	2016/17 Revised Budget $('000)	*2016/17 Notes*
ASSETS							
Current Assets							
Cash & Equivalent Assets	3,496	(38)	(984)	1,182	(112)	3,544	
Trade & Other Receivables	1,346		(116)			1,230	
Inventories	777					980	
Total Current Assets	5,619	(38)	(1,100)	1,182	(112)	5,754	
Non-Current Assets							
Financial Assets	910		223			1,133	
Infrastructure, Property, Plant & Equipment	339,833	174	(40,195)	(2,055)	905	298,662	
Total Non-Current Assets	340,743	174	(39,972)	(2,055)	905	299,795	
Total Assets	**346,362**	**136**	**(41,072)**	**(873)**	**793**	**305,549**	
LIABILITIES							
Current Liabilities							
Trade & Other Payables	2,379	(38)	(441)			1,900	
Borrowings	629		48		66	743	
Provisions	1,699		8		(7)	1,700	
Total Current Liabilities	**4,707**	**(38)**	**(385)**	**0**	**59**	**4,343**	
Non-Current Liabilities							
Borrowings	7,317		(14)		143	7,446	
Provisions	606		10		(2)	614	
Total Non-Current Liabilities	7,923	0	(4)	0	141	8,060	
Total Liabilities	**12,630**	**(38)**	**(389)**	**0**	**200**	**12,403**	
NET ASSETS	**333,732**	**174**	**(40,683)**	**(873)**	**593**	**293,146**	
EQUITY							
Accumulated Surplus	(2,480)	(148)	(5,296)	(551)	593	(7,882)	
Asset Revaluation Reserve	335,455		(35,118)			300,337	
Other Reserves	757		(66)			691	
TOTAL EQUITY	**333,732**	**(148)**	**(40,480)**	**(551)**	**593**	**293,146**	

YORKE PENINSULA COUNCIL
2016/17 BUDGET
BUDGETED STATEMENT OF CASH FLOWS

	2016/17 Adopted Budget $('000)	2016/17 Carry Forward Projects Adjustments $('000)	2016/17 September Budget Adjustments $('000)	2016/17 December Budget Adjustments $('000)	2016/17 March Budget Adjustments $('000)	2016/17 Revised Budget $('000)	*2016/17 Notes*
CASH FLOWS FROM OPERATING ACTIVITIES							
Receipts							
Operating Receipts	27,894	65	122	1,845	17	29,943	
Investment Receipts	162		(11)			151	
Payments							
Operating Payments to Suppliers and Employees	(21,028)	(321)	336	(17)	(167)	(21,197)	
Materials, contracts & other expenses	0			175	(175)	0	
Finance Costs	(477)		(11)		6	(482)	
Net Cash provided by (or used in) Operating Activities	**6,551**	**(256)**	**436**	**2,003**	**(319)**	**8,415**	
CASH FLOWS FROM INVESTING ACTIVITIES							
Receipts							
Amounts Specifically for New/Upgraded Assets	3,914			(1,852)		2,062	
Sale of Renewed/Replaced Assets	363				4	367	
Repayments of Loans by Community Groups	107		34			141	
Payments							
Expenditure on Renewal/Replacement of Assets	(6,027)	(3,266)	(30)	652	(19)	(8,690)	*27 - 45*
Expenditure on New/Upgraded Assets	(4,592)	(791)	(19)	114	12	(5,276)	*46 - 58*
Net Cash Provided by (or used in) Investing Activities	**(6,235)**	**(4,057)**	**(15)**	**(1,086)**	**(3)**	**(11,396)**	
CASH FLOWS FROM FINANCING ACTIVITIES							
Receipts							
Proceeds from Borrowings	0				209	209	
Payments							
Repayments of Borrowings	(648)		6			(642)	
Repayment of Finance Lease Liabilities	0					0	
Repayment of Aged Care Facility Deposits	0					0	
Net Cash provided by (or used in) Financing Activities	**(648)**	**0**	**6**	**0**	**209**	**(433)**	
						0	
Net Increase/(Decrease) in cash held	**(332)**	**(4,313)**	**427**	**917**	**(113)**	**(3,414)**	
Opening cash, cash equivalents or (bank overdraft)	3,828	4,275	(1,146)	0		6,957	
Closing cash, cash equivalents or (bank overdraft)	**3,496**	**(38)**	**(719)**	**917**	**(113)**	**3,543**	

YORKE PENINSULA COUNCIL
2016/17 BUDGET
BUDGETED STATEMENT OF CHANGES IN EQUITY

	2016/17 Adopted Budget $('000)	2016/17 Carry Forward Projects Adjustments $('000)	2016/17 September Budget Adjustments $('000)	2016/17 December Budget Adjustments $('000)	2016/17 March Budget Adjustments $('000)	2016/17 Revised Budget $('000)	*2016/17 Notes*
ACCUMULATED SURPLUS							
Balance at end of previous reporting period	(3,713)	(70)	(5,368)		657	(8,494)	
Net Result for Year	1,233	(148)	142	(551)	(64)	612	
Transfers to Other Reserves	0					0	
Transfers from Other Reserves	0					0	
Balance at end of period	**(2,480)**	**(218)**	**(5,226)**	**(551)**	**593**	**(7,882)**	
ASSET REVALUATION RESERVE							
Land	73,286					73,286	
Buildings and Other Structures	48,995					48,995	
Transportation Infrastructure	186,712		(35,817)			150,895	
Plant & Equipment	0					0	
Furniture & Fittings	0					0	
CWMS Infrastructure	14,481					14,481	
Water Scheme Infrastructure	1,374		699			2,073	
Other Assets	0					0	
Office Building	0					0	
Stormwater Drainage	10,607					10,607	
Balance at end of period	**335,455**	**0**	**(35,118)**	**0**	**0**	**300,337**	
OTHER RESERVES							
Balance at end of previous reporting period	757	70	(66)		(70)	691	
Transfers from Accumulated Surplus	0					0	
Transfers to Accumulated Surplus	0					0	
Balance at end of period	**757**	**70**	**(66)**	**0**	**(70)**	**691**	
TOTAL EQUITY AT END OF REPORTING PERIOD	**333,732**	**(148)**	**(40,410)**	**(551)**	**523**	**293,146**	

YORKE PENINSULA COUNCIL 2016/17 BUDGET BUDGETED FINANCIAL INDICATORS (RATIOS)							
	2016/17 Adopted Budget	2016/17 Carry Forward Projects Adjustments	2016/17 September Budget Adjustments	2016/17 December Budget Adjustments	2016/17 March Budget Adjustments	2016/17 Revised Budget	*2016/17* *Notes*
Operating Surplus Ratio - %	(9.6)%	(0.5)%	0.5%	4.9%	(0.2)%	(4.8)%	*1 - 26*
Net Financial Liabilities Ratio - %	24.5%	-0.1%	1.6%	-5.5%	1.0%	21.6%	
Asset Sustainability Ratio - %	62%	37%	0%	-11%	(0.5)%	88.0%	*27 - 45*

DIRECTOR CORPORATE AND COMMUNITY SERVICES

DA/ITEM 6.2

3. CHINAMAN WELLS SEAWALL FUNDING BY SEPARATE RATE REQUEST

PURPOSE

For Council to approve the declaration of a Separate Rate on seven (7) parcels of land that will benefit from the development of the seawall project at Chinaman Wells and are either unable to, or do not wish to, provide their share of the total cost from their own resources.

RECOMMENDATION

That Council declare, pursuant to Section 154 of the Local Government Act 1999, and in accordance with section 154(2)(b) of the Act, an annual separate rate on each of the land parcels listed below, being an annual charge based on a proportional measure or basis related to the relevant land or the area or to the estimated benefit to the occupiers of the land in the part of the area subject to the rate, for a period of ten (10) years commencing 1 July 2017 for the purpose of reimbursing Council the costs of the development and construction of a seawall at Chinaman Wells being works of particular benefit to the landholders and to the occupiers of the land adjacent the seawall construction.

Assessment Number	Property Description	Certificate of Title	Total Liability ($)	Annual Separate Rate ($)
24687	Lot 1, Chinaman Wells Road, Chinaman Wells	5932/504	$46,598.50	$4,659.85
24653	Lot 4, Chinaman Wells Road, Chinaman Wells	5928/511	$29,733.65	$2,973.37
24646	Lot 5, Chinaman Wells Road, Chinaman Wells	5926/618	$38,921.83	$3,892.18
24588	Lot 11, Chinaman Wells Road, Chinaman Wells	5930/227	$38,195.67	$3,819.57
24547	Lot 14, Chinaman Wells Road, Chinaman Wells	5925/29	$27,569.99	$2,757.00
24505	Lot 18, Chinaman Wells Road, Chinaman Wells	5930/98	$34,876.07	$3,487.61
24430	Lot 26, Chinaman Wells Road, Chinaman Wells	5933/775	$42,434.09	$4,243.41

That the annual separate rate commence in the financial year commencing 1 July 2017 and extend for a ten (10) year period, including the financial year ending 30 June 2027.

LINK TO STRATEGIC PLAN

Goal: 3 Valued and Restored Environment

5 Responsible Governance

Strategy: 3.4 Support Progress Associations and other community groups to improve environmental outcomes

5.2 Effective leadership and informed decision making

BACKGROUND

A request was received in 2016 from the Chinaman Wells Shack Owners group via their appointed representative Mr Doug Pritchard to request funding for the construction of a sea wall at the Chinaman Wells foreshore, approval for which has been given under Development Application 544/2244/2010.

The request was specifically for funding to be provided to certain shack owners who have indicated they cannot, or do not wish to, provide their share of the total cost from their own resources. Funding was requested in the form of a fixed interest, fixed term loan over either a 10 or 15 year period to be secured by a separate rate declared by Council on the properties that are unable or unwilling to meet their share of costs at this time.

At its meeting on Wednesday, 18th January 2017, Council gave "in principle" support to the request for funding for the seawall project, approved under Development Application 544/2244/2010; and endorsed the legislatively required public consultation process for this project based on the Public Consultation Report presented to Council at that meeting. More information can be found in January 2017 Council Meeting Minute 009/2017 (18/01/2017).

The consultation period commenced on Wednesday 25th January 2017 at 8.30am and closed on Thursday 23rd February 2017 at 5.00pm. A public meeting was held on the evening of 1st February 2017 in the Minlaton Council Chamber to outline the proposal and allow discussion/debate on the matter. This meeting focussed solely on the Consultation Report and all questions asked by the 13 attendees were verbally answered at that meeting. A total of eight (8) written responses were received.

At its meeting on Wednesday, 8th March 2017 Council received and considered all responses received during the public consultation period and approved the provision of requested funding to cover costs relating to those properties listed in Attachment 1 as requiring funding via a fixed low-interest, fixed term loan from the LGA Finance Authority over a 10 year period. Further Council authorised the Director Corporate and Community Services to bring a report to the Council meeting to be held on 10th May 2017 in compliance with Section 154(6) of the Local Government Act 1999 recommending a separate rate be declared for a ten (10) year period commencing on 1st July 2017 on properties benefitting from the construction and also accessing funding from Council. More information can be found in March 2017 Council Meeting Minute 059/2017 (08/03/2017).

Attachment 1 shows the total cost of construction, each parties' share and the amount of loan funding requested ($209,179). The attachment also shows the amount of separate rates (annual as well as over the life of the loan) applicable to each of the seven (7) parties unable or unwilling to meet their share of costs calculated based on the final interest rate of 4.2% p.a. for a fixed term of ten (10) years.

The total project cost was sourced by the group through a tender process and formal quotes were received.

It should be noted that Council is not being requested to contribute to the project either financially or in a project management, or any other, capacity. Council is not being asked to be responsible for the upkeep of any part of the seawall in to the future, nor is it requested that Council accept any liability for risk or insurance relating to the seawall. The request was simply for funding as outlined in this and previous reports to Council.

At its meeting on Wednesday, 12th April 2017 Council considered a report to enable formal borrowing of the funds requested by the Chinaman Wells Shack Owners group. It endorsed that pursuant to the provision of Section 134 of the Local Government Act 1999, the Yorke Peninsula Council does hereby order that the said Council shall borrow by means of a debenture loan on the security of the general revenue of the Council, the sum of $209,179 (Two Hundred and Nine Thousand One Hundred and Seventy Nine Dollars) from the Local Government Finance Authority and that the said loan shall be for a period of ten (10) years. The said loan will be for the funding of the Chinaman Wells Sea Wall project with all costs to be recovered via a separate rate declared for a ten (10) year period commencing on 1st July 2017 on properties benefitting from the construction and also accessing funding from Council.

Following the April 2017 Council Meeting, an application for the loan amount of $209,179 to be repaid over a fixed term of ten (10) years was lodged with the LGFA and subsequently approved. All documentation has now been completed and lodged with the LGFA and an interest rate of 4.2% p.a. locked in. Finalisation of the interest rate has enabled calculation of the separate rate amounts for the seven (7) applicable properties listed in Attachment 1. These amounts will be the basis for the raising of the separate rates in 2017-18 and beyond.

DISCUSSION

Section 154 of the Local Government Act 1999 permits Council to raise a separate rate on rateable properties, which will or which it is intended will benefit from a project or undertaking. To facilitate this a separate rate will be raised against those properties listed in Attachment 1 that will benefit from the seawall project that are unable to, or do not wish to, provide their share of the total costs from their own resources.

To ensure the costs for the project are shared in a proportional manner, the basis of the separate rate is that it will be levied on a proportional basis related to the relevant land and area, or the estimated benefit the occupiers of the land subject to the rate. The proportional basis for the calculations for the costs to each parcel of land is based on the frontage of each property and a cost per linear metre for construction of the wall along their frontage. Attachment 1 details the proportional basis the calculations are based on.

This separate rate, upon declaration, will apply annually for a ten (10) year period, from 1 July 2017, until 30 June 2027.

Payment of the separate rate will fall due, unless Council has entered into a specific agreement with a principal ratepayer, in four equal or approximately equal instalments during each financial year as stipulated in the rates notices issued to the ratepayer(s).

Once declared, the separate rate forms part of the annual rates and charges and is detailed in the rates notices issued to the ratepayer(s) and the same provisions apply in relation to payment.

Provisions provide that should payment of general or separate rates be likely to cause financial hardship, Section 182 of the Local Government Act 1999 details that postponement of rates, in whole or in part, may be considered if Council is satisfied, on the application of a ratepayer, that payment of rates would cause hardship.

Letters have been provided to each of the seven (7) land owners, that will be subject to the separate rate, detailing the process, their estimated liability, including their overall liability and annual liability, and what options are available if the rates cause financial hardship to them.

Upon declaration of the separate rate, each land owner will receive notification detailing their level of liability and what the annual separate rate will be for their rate assessment.

The separate rate is then provided for and detailed each year in their annual rates notice.

Local Government Act 1999 – Relevant Sections explained

Pursuant to Section 154 of the Local Government Act 1999, Council may declare separate rates on rateable land within a part of the area of the Council for the purpose of planning, carrying out, making available, supporting, maintaining or improving an activity that is, or intended to be or particular benefit to the land, or the occupiers of the land, within that part of the area. It is a charge on the land. A general rating principle is that a separate rate is an equitable targeted way of recovering the cost of the provision of services and infrastructure that are intended to primarily benefit a specific identifiable group of ratepayers.

Raising of Separate Rate

Section 154 of the Act permits Council to raise a separate rate on rateable properties, which will or which it is intended will benefit from a project or undertaking. The main legislative features of a separate rate are:

- It can be applied to rateable properties that benefit from the purpose of raising the separate rate;
- Money raised by these means cannot be put to any other use; and
- The separate rate must cease when the purpose has been completed and paid for.

In terms of the process, The Local Government Act, at Section 151(5) (c) provides that before the Council changes the imposition of rates on land by declaring a (new) separate rate, it is required to prepare a prescribed report on the proposed change and follow the steps set out in its public consultation policy. The report, which forms the basis of the consultation, is prescribed at Section 151(6) of the Act and is required to address at least:

- The reasons for the proposed separate rate;
- The relationship of the proposal to the Councils overall rates structures and policies;
- Insofar as is reasonably practicable, the likely impact on the ratepayers; and
- Issues concerning community equity.

This requirement was met via the Consultation Report made available during the consultation period and explained at the public meeting held.

Basis of Rating

A separate rate may be based on:

(a) The value of land subject to the rate; or
(b) A proportional measure or other proportional basis related to the relevant land or the area, or to the estimated benefit to the occupiers of the land in the part of the area subject to the rate; or
(c) A fixed charge – this would be an equal contribution per allotment by spreading the cost equitably.

A council may declare a separate rate in respect of a particular activity despite the fact that the activity is not directly undertaken or provided by Council.

In relation to the process and specifics of the Separate Rate:

- The separate rate can be declared for a specified period and may be declared for a period exceeding one year.
- Due to the amount of the separate rate, due to the larger amount of a proposed separate rate it would be suggested that the term of the rate would be 5-10 years.

Section 154(6) of the Local Government Act 1999 details – except where a separate rate is declared for more than one year, a separate rate must not be declared more than one month before the commencement of the financial year to which the rate relates.

Postponement of Payment

Once a rate is declared, either general or separate the following section provides Council with the option to review payment of rates in relation to hardship.

Section 182 of the Local Government Act 1999 details that if Council is satisfied on the application of a ratepayer that payment of rates in accordance with the Act would cause hardship, the Council may postpone payment on whole or in part for such period as the Council thinks fit.

Summary of Application to this Request

From analysis of the provisions of the Act it is evident that the request made by the Shack Owners Association sub-committee, as submitted, can be legally facilitated by Council.

Details of Cost Sharing and Funding Sought

Of the 38 shacks impacted by the development as proposed technically only two (2) have not agreed to share costs at this point but have been included, by the group, in the cost sharing calculations based on the same parameters as those who have agreed. The group has requested a separate rate to be declared by Council on this property under the “Benefit Received” principle to ensure their share of costs is paid. The total of the costs expected to be borne by these shack owners’ totals $65,876.83.

A total of 5 shack owners have agreed in relation to funding required from Council ranging from $22,324.42 to $37,732.42 incl. GST as calculated by the group based on agreed parameters for cost sharing. Costs applicable to these 5 shack owners totals $155,302.08 of

which $12,000.00 has been prepaid by shack owners resulting in a balance of $143,302.08 for which they have requested Council funding.

The remaining 16 owners have agreed to meet their share of costs of $503,164.08 from their own resources.

COMMUNITY ENGAGEMENT PLAN

Level 1 – Inform

CONSULTATION PROCESS

In preparing this report, the following Yorke Peninsula Council officers were consulted:

- Corporate Management Team
- Manager Financial Services
- Senior Rates Officer

In preparing this report, the following External Parties were consulted:

- Chinaman Wells Shack Owners Association

POLICY IMPLICATIONS

PO139 Treasury Management Policy

BUDGET AND RESOURCE IMPLICATIONS

There are no expected costs for Council other than administration in setting up of loans, declaration of separate rates and collection of rates. These costs are not considered to be material and, if they were considered significant, could be recovered via the declaration of the separate rates on the properties concerned. All repayments made over the life of the loan will be recovered in full through the separate rates raised against the applicable properties.

RISK/LEGAL/LEGISLATIVE IMPLICATIONS

In its current form the request does not impose risk or legal impositions on Council other than the normal risk associated with collection of rates.

Local Government Act 1999

Local Government (Financial Management) Regulations 2011

ATTACHMENTS

Attachment 1: Details of Proposed Cost Sharing – Chinaman Wells Seawall

Total Shacks	38
Shacks agreed shared Cost A	**24**
Shacks agreed shared Cost B	**24**

Individual costs	
Wall per L/M	
including Geo Mat	**$ 1,200.00**

Shared Cost A (new wall)		
Magryn (5 visits @ $1450)	$	7,250.00
Risk	$	20,000.00
Cost of shacks not participating	$	-
	$	**27,250.00**

Shared Cost B (all shacks)	**Frontage l/m**	**Cost**
Crown Land Lot 2	16.76	$ 20,112.00
Crown Land between lots 6 &7	28.51	$ 34,212.00
Crown Land between lots 11&12	17.04	$ 20,448.00
Crown Land between lots 18&19	13.67	$ 16,404.00
Crown Land between lots 19&21	17.2	$ 20,640.00
Wall Return at southern end	10	$ 12,000.00
Crown land wall total length	**103.18**	
Install Fencing (all shacks)	800m @ $6 per metr	$ 4,800.00
Fence Materials	All materials	$ 6,000.00
Walkovers	2 @ 6000 Worst Case	$ 12,000.00
Groynes	3	$ 12,000.00
	Total Cost	**$ 158,616.00**

Lot No.	Name	Assessment	Agreed Cost A	Agreed Cost B	Council Loan	Shack Frontage	Wall Construction	Shared A	Shared B	Total	Deposit	Balance	Cost L/M	Council Loan	Total Payable (Life of Loan: 10 Yrs)	Annual Payment via Separate Rate
1	RG Nicholls & KJ Mosey	24687	Yes	Yes	Yes	24.99	$ 29,988.00	$ 1,135.42	$ 6,609.00	$ 37,732.42		$ 37,732.42	$ 1,509.90	**$ 37,732.42**	**$ 46,598.50**	**$ 4,659.85**
3			Yes	Yes		12.86	$ 15,432.00	$ 1,135.42	$ 6,609.00	$ 23,176.42	$ 3,000.00	$ 20,176.42	$ 1,802.21			
4	HM Maschgan & PF & LJ & KM Duffy	24653	Yes	Yes	Yes	16.11	$ 19,332.00	$ 1,135.42	$ 6,609.00	$ 27,076.42	$ 3,000.00	$ 24,076.42	$ 1,680.72	**$ 24,076.42**	**$ 29,733.65**	**$ 2,973.37**
5	MS & DR & CL Doorne & M Markovic	24646				19.81	$ 23,772.00	$ 1,135.42	$ 6,609.00	$ 31,516.42		$ 31,516.42	$ 1,590.93	**$ 31,516.42**	**$ 38,921.83**	**$ 3,892.18**
6			yes	Yes		22.55	$ 27,060.00	$ 1,135.42	$ 6,609.00	$ 34,804.42	$ 3,000.00	$ 31,804.42	$ 1,543.43			
7			Yes	Yes		24.97	$ 29,964.00	$ 1,135.42	$ 6,609.00	$ 37,708.42	$ 3,000.00	$ 34,708.42	$ 1,510.15			
8			Yes	Yes		24.31	$ 29,172.00	$ 1,135.42	$ 6,609.00	$ 36,916.42	$ 3,000.00	$ 33,916.42	$ 1,518.57			
9			Yes	Yes		15.8	$ 18,960.00	$ 1,135.42	$ 6,609.00	$ 26,704.42	$ 3,000.00	$ 23,704.42	$ 1,690.15			
10			Yes	Yes		15.95	$ 19,140.00	$ 1,135.42	$ 6,609.00	$ 26,884.42	$ 3,000.00	$ 23,884.42	$ 1,685.54			
11	DL & RI Miller	24588	Yes	Yes	Yes	21.82	$ 26,184.00	$ 1,135.42	$ 6,609.00	$ 33,928.42	$ 3,000.00	$ 30,928.42	$ 1,554.92	**$ 30,928.42**	**$ 38,195.67**	**$ 3,819.57**
12			Yes	Yes		18.66	$ 22,392.00	$ 1,135.42	$ 6,609.00	$ 30,136.42	$ 3,000.00	$ 27,136.42	$ 1,615.03			
13			Yes	Yes		16.52	$ 19,824.00	$ 1,135.42	$ 6,609.00	$ 27,568.42	$ 3,000.00	$ 24,568.42	$ 1,668.79			
14	MAK Nominees Pty Ltd	24547	Yes	Yes	Yes	14.65	$ 17,580.00	$ 1,135.42	$ 6,609.00	$ 25,324.42	$ 3,000.00	$ 22,324.42	$ 1,728.63	**$ 22,324.42**	**$ 27,569.99**	**$ 2,757.00**
15			Yes	Yes		15.61	$ 18,732.00	$ 1,135.42	$ 6,609.00	$ 26,476.42	$ 3,000.00	$ 23,476.42	$ 1,696.12			
16			Yes	Yes		15.2	$ 18,240.00	$ 1,135.42	$ 6,609.00	$ 25,984.42	$ 3,000.00	$ 22,984.42	$ 1,709.50			
17			Yes	Yes		16.36	$ 19,632.00	$ 1,135.42	$ 6,609.00	$ 27,376.42	$ 3,000.00	$ 24,376.42	$ 1,673.38			
18	RG & SJ & GR Beck & LJ Leathley	24505	Yes	Yes	Yes	19.58	$ 23,496.00	$ 1,135.42	$ 6,609.00	$ 31,240.42	$ 3,000.00	$ 28,240.42	$ 1,595.53	**$ 28,240.42**	**$ 34,876.07**	**$ 3,487.61**
19			Yes	Yes		20.76	$ 24,912.00	$ 1,135.42	$ 6,609.00	$ 32,656.42	$ 3,000.00	$ 29,656.42	$ 1,573.05			
21			Yes	Yes		18.85	$ 22,620.00	$ 1,135.42	$ 6,609.00	$ 30,364.42	$ 3,000.00	$ 27,364.42	$ 1,610.84			
22			Yes	Yes		15.37	$ 18,444.00	$ 1,135.42	$ 6,609.00	$ 26,188.42	$ 3,000.00	$ 23,188.42	$ 1,703.87			
23			Yes	Yes		15.41	$ 18,492.00	$ 1,135.42	$ 6,609.00	$ 26,236.42	$ 3,000.00	$ 23,236.42	$ 1,702.56			
24			Yes	Yes		17.28	$ 20,736.00	$ 1,135.42	$ 6,609.00	$ 28,480.42	$ 3,000.00	$ 25,480.42	$ 1,648.17			
25			Yes	Yes		23.13	$ 27,756.00	$ 1,135.42	$ 6,609.00	$ 35,500.42	$ 3,000.00	$ 32,500.42	$ 1,534.82			
26	M D Desyllas	24430			Yes	22.18	$ 26,616.00	$ 1,135.42	$ 6,609.00	$ 34,360.42		$ 34,360.42	$ 1,549.16	**$ 34,360.42**	**$ 42,434.09**	**$ 4,243.41**
		Totals	**24**	**24**	**7**	**448.73**	**$ 538,476.00**	**$ 27,250.00**	**$ 158,616.00**	**$ 724,342.00**	**$ 63,000.00**	**$ 661,342.00**		**$ 209,178.92**	**$258,329.80**	**$ 25,832.98**

DIRECTOR CORPORATE AND COMMUNITY SERVICES

DA/ITEM 6.2

4. DRAFT 2017/18 ANNUAL BUSINESS PLAN AND BUDGET

PURPOSE

Each year Council develops and adopts an Annual Business Plan (ABP) and Budget. This document explains the context in which the Budget has been developed, provides information on what Council plans to achieve in the coming financial year and describes how this will be funded.

As part of the annual business planning process, Council's 2017/18 Fees and Charges schedule has also been reviewed and updated.

This report requests Council endorsement of the 2017/18 ABP, Budget and Fees and Charges for public consultation.

RECOMMENDATION

That Council endorse the 2017/18 draft Annual Business Plan, including the 2017/18 draft Budget and the 2017/18 Fees and Charges for the financial year ending 30th June 2018, for public consultation.

LINK TO STRATEGIC PLAN

Goal: 5 Responsible Governance

Strategy: 5.2 Effective leadership and informed decision making

5.3 Meet all legislative requirements and compliance with Council's internal controls

BACKGROUND

As required by the Local Government Act 1999 and the Local Government (Financial Management) Regulations 2011, Council must prepare its ABP and Budget in a timely fashion and make this plan available for public consultation prior to adoption.

As part of this process Council consults with the community and considers all feedback at a Council meeting prior to adoption of the ABP, Budget and Fees and Charges. Members of the public are also given the opportunity to present to Council at that scheduled meeting in regard to the ABP, Budget and Fees and Charges.

DISCUSSION

The draft ABP, Budget and Fees and Charges document will be supplied to Councillors under separate cover.

The draft ABP has been developed taking into account legislative requirements, the 2016-2020 Strategic Plan, the draft 2017/18 Budget which in turn was developed in accordance with the parameters of Council's 2016/17-2025/26 Long Term Financial Plan (LTFP).

The draft ABP sets out all capital projects and the budgeted statutory financial statements for the 2017/18 financial year. In addition, the ABP details actions from the Strategic Plan which will be achieved during the coming financial year.

The key assumptions made in the development of the draft Budget were:

- Inflation (CPI) assumed to be 1.3%:
- No change in service levels and appropriate spending on asset renewal in line with existing Asset Management Plans to maintain and upgrade ageing infrastructure
- Emphasis on achieving industry targets for financial sustainability indicators, within the ten (10) years of the LTFP.

The draft 2017/18 Budget has been prepared taking in to account reductions in discretionary grants available, cost pressures and challenges and 'one off' projects such as Minlaton Undergrounding of Power.

The total draft 2017/18 Capital Budget is also in line with total spending proposed in the LTFP, with additional spending of $1.5m on the footpath replacement project.

The draft Budget proposes a total of $7.8m to be invested in renewal of assets and $1.4m for upgrade to existing assets and purchase and creation of new assets.

While all efforts have been made to ensure the draft 2017/18 Budget is in line with the LTFP, cost pressures and challenges outside Council's control and one off projects not included in the original LTFP have impacted the draft 2017/18 Budget bottom line. These are detailed in the attached 2017/18 ABP.

Elected Members will also be provided with detailed departmental budget documents for their reference under separate cover prior to the June 2017 Council meeting.

As part of the annual business planning process Council's proposed 2017/18 Fees and Charges have been reviewed and updated to reflect current CPI increases, competitor pricing (where applicable), affordability, cost recovery vs. community service, possible loss of income and reduced use of Council facilities. This document is also subject to full community consultation prior to adoption in June 2017 and is included with the ABP.

Advertisements will be placed in the Yorke Peninsula Country Times and on Council's website and Facebook page, informing the public that copies of the draft 2017/18 ABP, Budget and Fees and Charges are available from Thursday 11th May 2017 for public comment. Copies will be sent to all Progress Associations and will be available to the general public at all Council office front counters.

Written submissions will close on Monday 5th June 2017 and in conjunction with the June meeting of Council, the opportunity will be provided for public presentations to Council.

COMMUNITY ENGAGEMENT PLAN

Level 1 Inform – Public Notice in Yorke Peninsula Country Times, Council's website and Facebook page.

CONSULTATION PROCESS

In preparing this report, the following Yorke Peninsula Council officers were consulted:

- Corporate Management Team
- Manager Financial Services
- Manager Business and Public Relations

In preparing this report, the following External Parties were consulted:

- Nil

POLICY IMPLICATIONS

PO142 Budget Reporting and Amendment Policy

BUDGET AND RESOURCE IMPLICATIONS

The draft 2017/18 Budget is consistent with the LTFP and Council's key financial direction of reducing the operating deficit and dedicating funds to the renewal of assets, consistent with Council's Infrastructure and Asset Management Plans.

While all efforts have been made to ensure the draft 2017/18 Budget is in line with the LTFP, cost pressures and challenges outside Council's control and one off projects not included in the original LTFP have impacted the draft 2017/18 Budget bottom line.

RISK/LEGAL/LEGISLATIVE IMPLICATIONS

Local Government Act 1999

Local Government (Financial Management) Regulations 2011

ATTACHMENTS

Under separate cover – Yorke Peninsula Council Draft 2016/17 Annual Business Plan

DIRECTOR DEVELOPMENT SERVICES

DA/ITEM 6.4

1. PROPOSED ROAD PROCESS ORDER - ADELBRIDGE PTY LTD

PURPOSE

The Community Engagement process has now closed for the proposed road closure of an unmade road reserve and submissions have been received.

RECOMMENDATION

That Council:

1. receive written submissions in response to the Community Engagement process on the proposed road closure of a portion of unmade road reserve between Section 420 PLN 130500, Crown Record Volume 5765 Folio 587 and Section 182 PLN 130500, Certificate of Title Volume 5576 Folio 139, Section 181 PLN 130500, Certificate of Title Volume 5231 Folio 179, Section 178 PLN 130500, Certificate of Title Volume 5231 Folio 178 and Section 180 PLN130500, Certificate of Title Volume 5487 Folio 867.

2. make a road process order in accordance with the Roads (Opening and Closing) Act 1991, to close the said portion of unmade road for the purpose of selling the land to Adelbridge Pty Ltd for $5,000.

3. authorise the Mayor and Chief Executive Officer to sign and affix Council's seal to the necessary documentation to give effect to this resolution.

LINK TO STRATEGIC PLAN

Goal: 5 Responsible Governance

Strategy: 5.4 Seek alternate income streams and ensure financial sustainability

BACKGROUND

A recommendation was carried at the 13th July 2016 Council meeting to commence the road closure process, under the Roads (Opening & Closing) Act 1991, for an unmade road reserve for the purpose of selling the land to Adelbridge Pty Ltd.

DISCUSSION

As part of the road closure process, Council are required to undertake community engagement on the proposal. A Public Notice was advertised in the 14th February 2017, edition of the Yorke Peninsula Country Times and on Council's website asking for submissions to be received within twenty eight days.

A preliminary plan of the road reserve and a Statement of Owners/Occupiers and Public Authorities/Utilities were prepared by Maloney Field Services for public viewing. Letters were sent with the plan included, to the affected land owners and service providers notifying them of the proposed road closure.

Submissions were received from service providers APA Group (gas provider), ElectraNet, SA Power Networks and SA Water informing Council that there were no assets or infrastructure that would be affected by the proposed road closure.

Correspondence was also received from the Department of Environment, Water and Natural Resources (DEWNR) requesting that Council and the proposed purchaser of the land ensure that the boundary between the closed road and the adjacent Crown land is adequately defined. Also that there be no encroachment onto, or use of the adjacent Crown land without the authority from the Minister for Sustainability, Environment and Conservation.

The letter from the DEWNR has been forwarded to Adelbridge Pty Ltd noting that the proposed purchaser will need to adhere to the request for the defined boundary, preferably in the form of fencing.

COMMUNITY ENGAGEMENT PLAN

Community Engagement Plan Level 2 - completed

CONSULTATION PROCESS

In preparing this report, the following Yorke Peninsula Council officers were consulted:

- Property Tenure Officer
- Director Development Services
- Director Assets and Infrastructure Services
- Assets Manager
- Operations Manager
- Operations Co-ordinator
- Manager Works

In preparing this report, the following External Parties were consulted:

- First National Real Estate Barrett
- Landmark Harcourts Minlaton
- Maloney Field Services

POLICY IMPLICATIONS

PO072 Sale & Disposal of Land & Other Assets Policy

PO057 Community Engagement Policy

BUDGET AND RESOURCE IMPLICATIONS

$5,000 - Proceeds to Council from the sale of the road reserve

All costs associated with the road closure process including advertising are to be met by Adelbridge Pty Ltd.

RISK/LEGAL/LEGISLATIVE IMPLICATIONS

Roads (Opening and Closing) Act 1991

Local Government Act 1999, Section 201

Local Government Act 1999 Section 193

ATTACHMENTS

Attachment 1: Statements of Notice for Public Authorities and Utilities & Owners/Occupiers, Preliminary Plan and Public Notice

Attachment 2: Submissions from Public Authorities and Utilities

Attachment 3: Department of Environment, Water and Natural Resources correspondence

Attachment 4: Community Engagement Plan Level 2 – Completed

Preliminary Plan 16/0047

STATEMENT OF PRESCRIBED PUBLIC AUTHORITIES AND UTILITIES

Pursuant to Section 3(1) of the Roads (Opening & Closing) Act 1991 and Sections 4 & 5 of the Roads (Opening and Closing) Regulations 2006

PUBLIC UTILITIES/AUTHORITIES	ADDRESS FOR NOTIFICATION	Y/N
South Australian Water Corporation	Property Services GPO Box 1751 Adelaide SA 5001	
Distribution Lessor Corporation	SA Power Networks Real Estate Branch GPO Box 77 Adelaide SA 5001	
Transmission Lessor Corporation	ElectraNet Property Services PO Box 7096 Hutt Street Post Office Adelaide SA 5000	
Envestra (SA) Ltd	The APA Group Capital Works 330 Grange Road Kidman Park SA 5023	
TELSTRA Corporation Ltd	Network Integrity Services Locked Bag 3573 Brisbane Qld 4000	
Epic Energy Ltd	Operation and Engineering 26 High Street Dry Creek SA 5094	
Office for Recreation & Sport	Asset Management & Developments Office for Recreation & Sport PO Box 219 Brooklyn Park SA 5025	

Preliminary Plan 16/0047

STATEMENT OF OWNERS, OCCUPIERS AND ENCUMBRANCES UNDER THE ROADS (OPENING AND CLOSING) ACT 1991

COUNCIL: YORKE PENINSULA COUNCIL

HUNDRED AND DESCRIPTION	OWNER AND ADDRESS	OCCUPIER AND ADDRESS	ENCUMBRANCER AND ADDRESS
Hundred of Dalrymple			
Section 420 CR 5765/587	Minister for Sustainability, Environment & Conservation Adelaide SA 5000		
Section 182 CT 5576/139	Adelbridge Pty Ltd ACN 057 446 750 617 Olive Tree Road Yorketown SA 5576		M.11995618 Rabobank Australia Ltd 5/2 King William Street Adelaide SA 5000
Section 181 CT 5231/179	Ian David Hoile & Veronica Jane Hoile Stansbury SA 5582		
Section 178 CT 5231/178	Ian David Hoile & Veronica Jane Hoile Stansbury SA 5582		
Section 180 CT 5487/867	Rob Sherriff Nominees Pty Ltd ACN 072 895 295 PMB 18 Minlaton SA 5575		
Section 408 CL 1604/14	Rob Sherriff Nominees Pty Ltd ACN 072 895 295 PMB 18 Minlaton SA 5575		

10/11/16

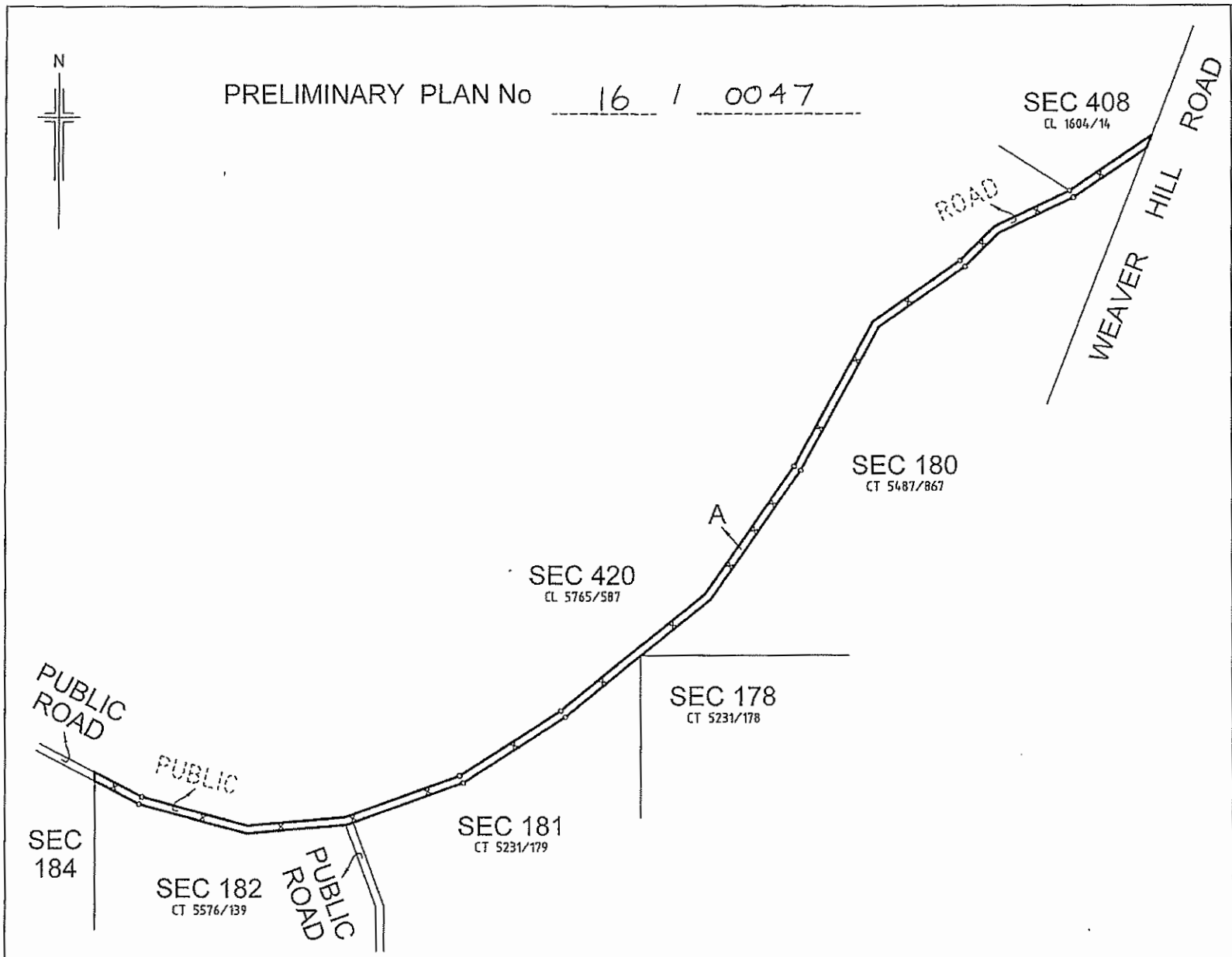

PRELIMINARY PLAN

MAP REF: 6428-42-N & P 6428/49/C DEV. No.

TITLE SYSTEM:

TITLE REFERENCE FOR ROAD: CT

IRRIGATION AREA

HUNDRED: DALRYMPLE

AREA: YORKETOWN

COUNCIL: YORKE PENINSULA COUNCIL

PLAN UNDER THE ROADS (OPENING & CLOSING) ACT, 1991

STATEMENTS CONCERNING EASEMENTS ANNOTATIONS AND AMENDMENTS

PROPOSAL CERTIFIED CORRECT AS TO INTENT:

DATED 10/11/16 AUTHORISED OFFICER

I HEREBY CERTIFY THAT THE PORTION OF ROAD TO BE CLOSED LETTERED 'A' HERON IS PUBLIC ROAD WITHIN THE MEANING OF SECTION 3 OF THE ROADS (OPENING & CLOSING) ACT, 1991

AUTHORITY:

Martin J. Leaker
LICENCED SURVEYOR

DATE: 17/10/2016 REF: PL7783 V2

PyperLeaker
surveying services
p 08 8373 3880
a 65 Goodwood Road
Wayville SA 5034
e info@plsurvey.com.au

Preliminary Plan 16/0047

STATEMENT OF OWNERS, OCCUPIERS AND ENCUMBRANCES UNDER THE ROADS (OPENING AND CLOSING) ACT 1991

COUNCIL: YORKE PENINSULA COUNCIL

HUNDRED AND DESCRIPTION	OWNER AND ADDRESS	OCCUPIER AND ADDRESS	ENCUMBRANCER AND ADDRESS
Hundred of Dalrymple			
Section 420 CR 5765/587	Minister for Sustainability, Environment & Conservation Adelaide SA 5000		
Section 182 CT 5576/139	Adelbridge Pty Ltd ACN 057 446 750 617 Olive Tree Road Yorketown SA 5576		M.11995618 Rabobank Australia Ltd 5/2 King William Street Adelaide SA 5000
Section 181 CT 5231/179	Ian David Hoile & Veronica Jane Hoile Stansbury SA 5582		
Section 178 CT 5231/178	Ian David Hoile & Veronica Jane Hoile Stansbury SA 5582		
Section 180 CT 5487/867	Rob Sherriff Nominees Pty Ltd ACN 072 895 295 PMB 18 Minlaton SA 5575		
Section 408 CL 1604/14	Rob Sherriff Nominees Pty Ltd ACN 072 895 295 PMB 18 Minlaton SA 5575		

10/1/16

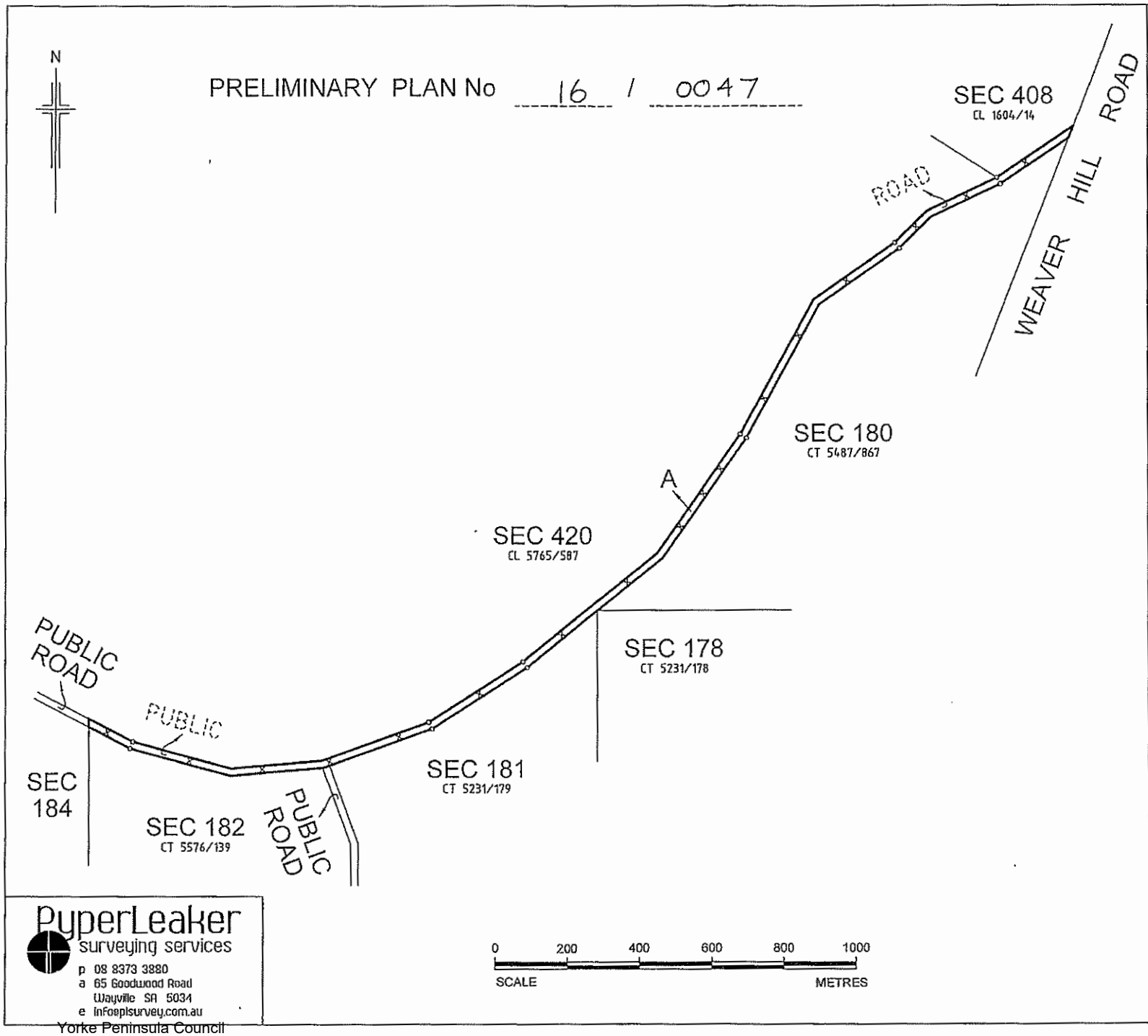

PRELIMINARY PLAN

MAP REF: 6428-42-N & P 6428/49/C DEV. No.

TITLE SYSTEM:

TITLE REFERENCE FOR ROAD: CT

IRRIGATION AREA

HUNDRED: DALRYMPLE

AREA: YORKETOWN

COUNCIL: YORKE PENINSULA COUNCIL

PLAN UNDER THE ROADS (OPENING & CLOSING) ACT, 1991

STATEMENTS CONCERNING EASEMENTS ANNOTATIONS AND AMENDMENTS

PROPOSAL CERTIFIED CORRECT AS TO INTENT:

DATED 10/11/16 AUTHORISED OFFICER

I HEREBY CERTIFY THAT THE PORTION OF ROAD TO BE CLOSED LETTERED 'A' HERON IS PUBLIC ROAD WITHIN THE MEANING OF SECTION 3 OF THE ROADS (OPENING & CLOSING) ACT, 1991

AUTHORITY:

Martin J. Leaker
LICENCED SURVEYOR

DATE: 17/10/2016 REF: PL7783 V2

PyperLeaker
surveying services
p 08 8373 3880
a 65 Goodwood Road
Wayville SA 5034
e info@plsurvey.com.au

Agriculturally rich - naturally beautiful

Roads (Opening and closing) Act 1991 Road Closure – portion

NOTICE is hereby given pursuant to Section 10 of the said Act, that Council proposes to close and sell to Adelbridge Pty Ltd that portion of unnamed road between Sections 408 and 420 Hundred of Dalrymple and Sections 180, 178, 181 and 182 Hundred of Dalrymple more particularly delineated and lettered "A" on Preliminary Plan 16/0047.

A copy of the plan and a statement of persons affected are available for public inspection at the offices of Yorke Peninsula Council at Maitland, Minlaton, Warooka and Yorketown, and the office of the Surveyor-General at 101 Grenfell Street, Adelaide, during normal office hours.

Any application for easement or objection must set out the full name, address and details of the submission and must be fully supported by reasons. The application for easement or objection must be made in writing to Yorke Peninsula Council at
PO Box 57, Maitland SA 5573, or via email *admin@yorke.sa.gov.au* WITHIN 28 DAYS OF THIS NOTICE and a copy must be forwarded to the Surveyor-General at GPO Box 1354, Adelaide SA 5001. Where a submission is made, the Council will give notification of a meeting at which the matter will be considered.

Andrew Cameron
CHIEF EXECUTIVE OFFICER

3-1.

Marilyn Mensforth

From: Fiona Thompson <FThompson@maloney.com.au>
Sent: Monday, 20 March 2017 9:29 AM
To: Marilyn Mensforth
Subject: HPRM: FW: Notification of Proposed Road Process Pursuant to Section 10 of the Roads (Opening and Closing) Act 1991
Attachments: RoC - PP16_0048.pdf; RoC - PP16 -0047.pdf

Record Number: 17/19550

Hi Marilyn

The response from APA is attached.

Regards

Fiona

Maloney Field Services
NATIONAL VALUATION AND LAND ACCESS SOLUTIONS

Fiona Thompson
Manager - Regulation Compliance & Land Tenure

Level 1, 215 Greenhill Road, Eastwood, SA 5063 AUSTRALIA
Phone +61 8 8378 8111 I Fax +61 8 8378 8122
Email fthompson@maloney.com.au I maloney.com.au

Follow us on

Adelaide Brisbane North Sydney Darwin

Liability limited by a scheme approved under Professional Standards Legislation.

This email and any files transmitted with it are intended for the named recipient only. The information contained in this message may be confidential, legally privileged or commercially sensitive. If you are not the intended recipient you must not reproduce or distribute any part of the email, disclose its contents to any other party, or take any action in reliance on it. If you have received this email in error, please contact the sender immediately by return email and delete this message from your computer.

THINK before you PRINT

From: Marra, Keileigh [mailto:keileigh.marra@apa.com.au]
Sent: Monday, 20 March 2017 8:36 AM
To: Fiona Thompson

Cc: Read, Matthew
Subject: Notification of Proposed Road Process Pursuant to Section 10 of the Roads (Opening and Closing) Act 1991

Good Morning Fiona,

In response to the attached correspondence, APA Group has no objections to the proposed road closures.

Should you require additional information please do not hesitate to contact me.

Kind Regards,

Keileigh Marra
Technical Officer – Third Party Works

APA Group
South Australian Networks
330 Grange Rd, Kidman Park SA 5025
PO Box 171, Findon SA 5023

m +61 418 853 508
e keileigh.marra@apa.com.au
w www.apa.com.au

This email and any attachment is confidential, may be subject to legal privilege, and is for the use of the intended recipient only. If received in error, please notify APA by reply and delete the email. If you are not the intended recipient, any use, interference with, disclosure or copying of this material is prohibited. Views expressed are those of the author and not APA. APA does not guarantee nor accept liability for the reliability, completeness or confidentiality of any email communication, nor its freedom from harmful viruses or software.

APA handles personal information in accordance with relevant privacy laws and our privacy policy is accessible on APA's website.

SA Water
ABN 69 336 525 019

Property Services
250 Victoria Square
Adelaide SA 5000
Enquiries: David Rowe
david.rowe@sawater.com.au
Ph: (08) 7424 1886
Fax: (08) 7003 1886

21 February 2017

SA Water reference: PS.50.17
Preliminary Plan: 16/0047

Andrew Cameron
Chief Executive Officer
Yorke Peninsula Council
PO Box 57
MAITLAND SA 5573

ROADS OPENING AND CLOSING – PUBLIC ROAD HD OF DALRYMPLE YORKETOWN PP 16/0047

Dear Andrew,

I refer to correspondence in regards to the above matter advertised in the Government Gazette on 16 February 2017. I wish to advise that SA Water has no infrastructure affected and therefore does not require an easement and does not object to the council's proposal.

Should you require any further information in regards to this matter please do not hesitate to contact me.

Regards,

David Rowe
Property Support Officer

3-3.

Marilyn Mensforth

From: Angela Clark <Angela.Clark@sapowernetworks.com.au>
Sent: Tuesday, 14 March 2017 2:45 PM
To: 'fthompson@maloney.com.au'
Subject: Proposed Road Closing PPlan 16/0047 Public Road Yorketown

Dear Fiona

I refer to your earlier communications advising of this proposal.

I advise that SA Power Networks have no infrastructure that will be impacted by this proposal and accordingly have no objections/requirements.

If you have any queries please do not hesitate to contact me.

Kind regards,

Angela Clark
Easements Manager
Registered Conveyancer

Direct: 08 8404 5897
Mobile: 0433 463 885
Angela.clark@sapowernetworks.com.au
---
1 Anzac Highway, Keswick SA 5035
www.sapowernetworks.com.au

SA Power Networks

****

This email and any file attachments are highly confidential. If you have received this email in error please notify the sender and delete the email. You should note the contents of the email do not necessarily represent the views of SA Power Networks, nor can we guarantee that the email is free of any malicious code. If you have any doubts about the source or authenticity of the email, please contact us on 13 12 61.

****

ElectraNet

Your ref: 16/0047
Our ref:

2 March 2017

Ms Fiona Thompson
Manager – Regulation Compliance & Land Tenure
Maloney Field Services
Level 1, 215 Greenhill Road
Eastwood SA 5063

Dear Fiona

re: Proposed Road Closure – Weaver Hill Road, Yorketown – PP 16/0047

I refer to your letter dated 16 February 2017 regarding this proposal.

ElectraNet does not have any assets which will be affected by the proposed road closure. Accordingly, ElectraNet has no objection to the proposal.

Any further queries, please do not hesitate to contact me on (08) 8404 7131.

Yours sincerely

Headland

Tamra Headland
Property Services Advisor

ElectraNet Pty Ltd
ABN 41 094 482 416 ACN 094 482 416
Postal Details: PO Box 7096, Hutt Street Post Office, Adelaide, South Australia, 5000
Telephone: +61 8 8404 7966 **Toll Free:** 1800 243 853 **Facsimile:** +61 8 8404 7956
Email: enquiry@electranet.com.au **electranet.com.au**

Government of South Australia
Department of Environment, Water and Natural Resources

Crown Lands Program
Economic and Sustainable Development
Level 8
81-95 Waymouth Street
ADELAIDE SA 5000
GPO Box 1047
ADELAIDE SA 5001
Ph: +61 8 8204 1218
www.environment.sa.gov.au

Yorke Peninsula Council
PO Box 57
MAITLAND SA 5573

To whom it may concern,

NOTIFICATION OF PROPOSED ROAD PROCESS – PRELIMINARY PLAN 16/0047

I refer to Council's proposal to close the public road shown as "A" and delineated in Preliminary Plan 16/0047.

The Crown Lands Program, Department of Environment, Water and Natural Resources has no objection to the proposal.

Council, and the proposed purchaser of the land are requested to ensure that the boundary between the closed road and the adjacent Crown land is adequately defined. No encroachment onto, or use of the adjacent Crown land is permitted without authority from the Minister for Sustainability, Environment and Conservation.

For further information on this matter, please contact Tony Halls on 8463 3848 or at Tony.Halls@sa.gov.au.

Yours faithfully

Tony Halls
SENIOR PROPERTY OFFICER

Cc: Surveyor-General (Roads Unit)

COMMUNITY ENGAGEMENT PLAN

SF215
Responsible Officer: Business Improvement Officer
Issue Date: 10th June 2015
Next Review Date: June 2019

PROJECT NAME: Road Closure Process - Adelbridge Pty. Ltd.

Stakeholders	Level 2 CONSULT	Responsibility	Start Date	End Date	Status	Evaluation Method
Entire community	Public Notice	Property Tenure Officer	14/02/2017	14/03/2017	C	Public Notice advertised once copies of the plans and statements of persons affected have been prepared for public inspection by the surveyor. Report back to Council on outcome of community engagement process. Elected members to make decision based on any submissions received.
Entire community	Website	Property Tenure Officer	14/02/2017	14/03/2017	C	
Entire community	Ability to appear before Council	Property Tenure Officer	14/02/2017	14/03/2017	C	
Affected residents	Personalised Letter	Property Tenure Officer	14/02/2017	14/03/2017	C	
Affected businesses	Personalised Letter	Property Tenure Officer	14/02/2017	14/03/2017	C	

DIRECTOR DEVELOPMENT SERVICES

DA/ITEM 6.4

2. PROPOSED ROAD PROCESS ORDER – S T JOHNS PTY LTD

PURPOSE

The Community Engagement process has now closed for the proposed road closure of an unmade road reserve and submissions have been received.

RECOMMENDATION

That Council:

1. receive written submissions in response to the Community Engagement process on the proposed road closure of the unmade road reserve between Section 297 PLN 130800, Certificate of Title: Volume 5348 Folio 524 and Sections 93 & 94 PLN 130800, Certificate of Titles: Volume 5337 Folio 30 & Volume 5337 Folio 29 respectively.

2. make a road process order in accordance with the Roads (Opening and Closing) Act 1991, to close the said portion of unmade road for the purpose of selling the land to S T Johns Pty Ltd for $6,000 per hectare.

3. authorise the Mayor and Chief Executive Office to sign and affix Council's seal to the necessary documentation to give effect to this resolution.

LINK TO STRATEGIC PLAN

Goal: 5 Responsible Governance

Strategy: 5.4 Seek alternate income streams and ensure financial sustainability

BACKGROUND

A recommendation was carried at the 10th August 2016 Council meeting to commence the road closure process, under the Roads (Opening & Closing) Act 1991, for an unmade road reserve for the purpose of selling the land to S T Johns Pty Ltd.

DISCUSSION

As part of the road closure process, Council are required to undertake community engagement on the proposal. A public notice was advertised in the 14th February 2017 edition of the Yorke Peninsula Country Times and on Council's website asking for submissions to be received within twenty eight days.

A preliminary plan of the road reserve and a Statement of Owners/Occupiers and Public Authorities/Utilities were prepared by Maloney Field Services for public viewing. Letters were sent with the plan included, to the affected land owners and service providers notifying them of the proposed road closure.

Submissions were received from service providers APA Group (gas provider), ElectraNet, SA Power Networks and SA Water informing Council that there were no assets or infrastructure that would be affected by the proposed road closure.

No other submissions were received.

COMMUNITY ENGAGEMENT PLAN

Community Engagement Plan Level 2 - completed

CONSULTATION PROCESS

In preparing this report, the following Yorke Peninsula Council officers were consulted:

- Property Tenure Officer
- Director Development Services
- Director Assets and Infrastructure Services
- Assets Manager
- Operations Manager
- Operations Co-ordinator
- Manager Works

In preparing this report, the following External Parties were consulted:

- First National Real Estate Barrett
- Landmark Harcourts Minlaton
- Maloney Field Services

POLICY IMPLICATIONS

PO072 Sale & Disposal of Land & Other Assets Policy

PO057 Community Engagement Policy

BUDGET AND RESOURCE IMPLICATIONS

$18,000 - Proceeds to Council from the sale of the road reserve

All costs associated with the road closure process, including advertising, are to be met by S T Johns Pty Ltd

RISK/LEGAL/LEGISLATIVE IMPLICATIONS

Roads (Opening and Closing) Act 1991

Local Government Act 1999, Section 201

Local Government Act 1999 Section 193

ATTACHMENTS

Attachment 1: Statements of Notice for Public Authorities and Utilities & Owners/Occupiers, Preliminary Plan and Public Notice

Attachment 2: Submissions from Public Authorities and Utilities

Attachment 3: Community Engagement Plan Level 2 – Completed

Preliminary Plan --/-- 16/0048

STATEMENT OF PRESCRIBED PUBLIC AUTHORITIES AND UTILITIES

Pursuant to Section 3(1) of the Roads (Opening & Closing) Act 1991 and Sections 4 & 5 of the Roads (Opening and Closing) Regulations 2006

PUBLIC UTILITIES/AUTHORITIES	ADDRESS FOR NOTIFICATION	Y/N
South Australian Water Corporation	Property Services GPO Box 1751 Adelaide SA 5001	
Distribution Lessor Corporation	SA Power Networks Real Estate Branch GPO Box 77 Adelaide SA 5001	
Transmission Lessor Corporation	ElectraNet Property Services PO Box 7096 Hutt Street Post Office Adelaide SA 5000	
Envestra (SA) Ltd	The APA Group Capital Works 330 Grange Road Kidman Park SA 5023	
TELSTRA Corporation Ltd	Network Integrity Services Locked Bag 3573 Brisbane Qld 4000	
Epic Energy Ltd	Operation and Engineering 26 High Street Dry Creek SA 5094	
Office for Recreation & Sport	Asset Management & Developments Office for Recreation & Sport PO Box 219 Brooklyn Park SA 5025	

Preliminary Plan 16/0048

STATEMENT OF OWNERS, OCCUPIERS AND ENCUMBRANCES UNDER THE ROADS (OPENING AND CLOSING) ACT 1991

COUNCIL: YORKE PENINSULA COUNCIL

HUNDRED AND DESCRIPTION	OWNER AND ADDRESS	OCCUPIER AND ADDRESS	ENCUMBRANCER AND ADDRESS
Hundred of Maitland			
Section 297 CT 5348/524	Banshavilla Pty Ltd ACN 007 811 538 c/- Andrew B Thiele & Co 10 Elizabeth Street Maitland SA 5573		
Section 93 CT5337/30	S.T. Johns Pty Ltd ACN 007 658 120 431 Old Boundary Road Weetulta SA 5573		M.8092382 Bank of South Australia Ltd GPO Box 399 Adelaide SA 5001
Section 94 CT 5337/29	S.T. Johns Pty Ltd ACN 007 658 120 431 Old Boundary Road Weetulta SA 5573		M.8092382 Bank of South Australia Ltd GPO Box 399 Adelaide SA 5001

10/11/16

PRELIMINARY PLAN

PRELIMINARY PLAN No 16 / 0048

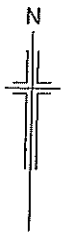

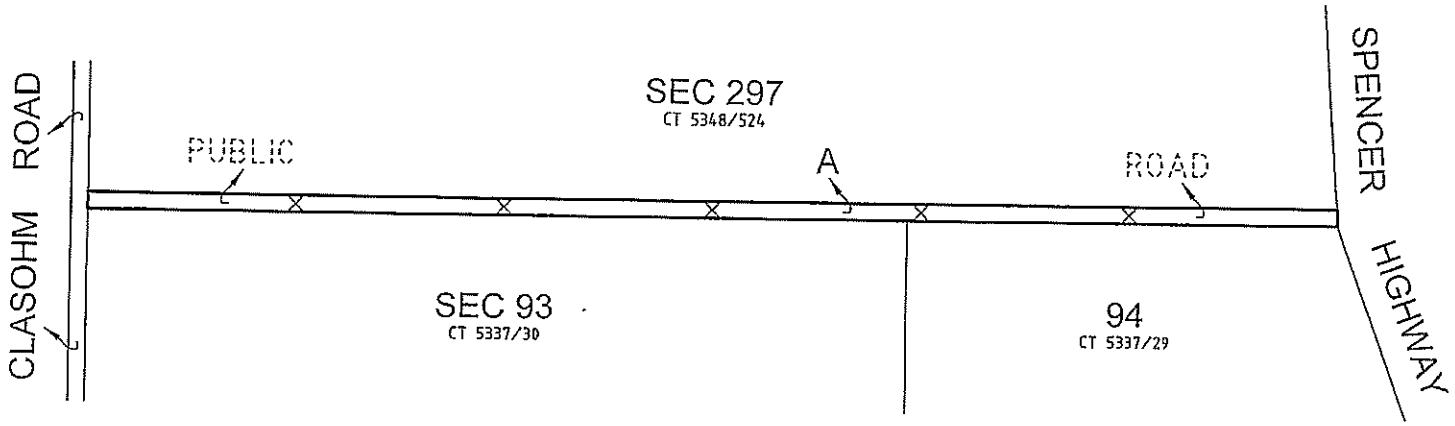

MAP REF: 6428-32-F, G, K & L DEV. No.

TITLE SYSTEM:

TITLE REFERENCE FOR ROAD: CT

IRRIGATION AREA

HUNDRED: MAITLAND

AREA: MAITLAND

COUNCIL: YORKE PENINSULA COUNCIL

PLAN UNDER THE ROADS (OPENING & CLOSING) ACT. 1991

ROAD TO BE CLOSED LETTERED A

STATEMENTS CONCERNING EASEMENTS ANNOTATIONS AND AMENDMENTS

PROPOSAL CERTIFIED CORRECT AS TO INTENT:

DATED: 10/11/16 AUTHORISED OFFICER

I HEREBY CERTIFY THAT THE PORTION OF ROAD TO BE CLOSED LETTERED 'A' HERON IS PUBLIC ROAD WITHIN THE MEANING OF SECTION 3 OF THE ROADS (OPENING & CLOSING) ACT, 1991

AUTHORITY:

DAVID E PYPER
LICENCED SURVEYOR

DATE: 4/11/2016 REF: 90L7782

PyperLeaker
surveying services
p 08 8373 3880
a 65 Goodwood Road
Wayville SA 5034
e info@plsurvey.com.au

0 100 200 400 600
SCALE METRES

Agriculturally rich - naturally beautiful

Roads (Opening and closing) Act 1991 Road Closure

NOTICE is hereby given pursuant to Section 10 of the said Act, that Council proposes to close and sell to S.T. Johns Pty Ltd that portion of unnamed road between Sections 93 and 94 Hundred of Maitland and Section 297 Hundred of Maitland more particularly delineated and lettered "A" on Preliminary Plan 16/0048.

A copy of the plan and a statement of persons affected are available for public inspection at the offices of Yorke Peninsula Council at Maitland, Warooka, Yorketown, and the office of the Surveyor-General at 101 Grenfell Street, Adelaide, during normal office hours.

Any application for easement or objection must set out the full name, address and details of the submission and must be fully supported by reasons. The application for easement or objection must be made in writing to Yorke Peninsula Council at PO Box 57, Maitland SA 5573, or via email *admin@yorke.sa.gov.au* WITHIN 28 DAYS OF THIS NOTICE and a copy must be forwarded to the Surveyor-General at GPO Box 1354, Adelaide SA 5001. Where a submission is made, the Council will give notification of a meeting at which the matter will be considered.

Andrew Cameron
CHIEF EXECUTIVE OFFICER

Marilyn Mensforth

From: Fiona Thompson <FThompson@maloney.com.au>
Sent: Monday, 20 March 2017 9:29 AM
To: Marilyn Mensforth
Subject: FW: Notification of Proposed Road Process Pursuant to Section 10 of the Roads (Opening and Closing) Act 1991
Attachments: RoC - PP16_0048.pdf; RoC - PP16 -0047.pdf

Hi Marilyn

The response from APA is attached.

Regards

Fiona

Maloney Field Services
NATIONAL VALUATION AND LAND ACCESS SOLUTIONS

Fiona Thompson
Manager - Regulation Compliance & Land Tenure

Level 1, 215 Greenhill Road, Eastwood, SA 5063 AUSTRALIA
Phone +61 8 8378 8111 I **Fax** +61 8 8378 8122
Email fthompson@maloney.com.au I maloney.com.au

Follow us on

Adelaide | Brisbane | North Sydney | Darwin

Liability limited by a scheme approved under Professional Standards Legislation.

This email and any files transmitted with it are intended for the named recipient only. The information contained in this message may be confidential, legally privileged or commercially sensitive. If you are not the intended recipient you must not reproduce or distribute any part of the email, disclose its contents to any other party, or take any action in reliance on it. If you have received this email in error, please contact the sender immediately by return email and delete this message from your computer.

THINK before you PRINT

From: Marra, Keileigh [mailto:keileigh.marra@apa.com.au]
Sent: Monday, 20 March 2017 8:36 AM
To: Fiona Thompson
Cc: Read, Matthew
Subject: Notification of Proposed Road Process Pursuant to Section 10 of the Roads (Opening and Closing) Act 1991

Good Morning Fiona,

In response to the attached correspondence, APA Group has no objections to the proposed road closures.

Should you require additional information please do not hesitate to contact me.

Kind Regards,

Keileigh Marra
Technical Officer – Third Party Works

APA Group
South Australian Networks
330 Grange Rd, Kidman Park SA 5025
PO Box 171, Findon SA 5023

m +61 418 853 508
e keileigh.marra@apa.com.au
w www.apa.com.au

This email and any attachment is confidential, may be subject to legal privilege, and is for the use of the intended recipient only. If received in error, please notify APA by reply and delete the email. If you are not the intended recipient, any use, interference with, disclosure or copying of this material is prohibited. Views expressed are those of the author and not APA. APA does not guarantee nor accept liability for the reliability, completeness or confidentiality of any email communication, nor its freedom from harmful viruses or software.

APA handles personal information in accordance with relevant privacy laws and our privacy policy is accessible on APA's website.

SA Water
ABN 69 336 525 019

Property Services
250 Victoria Square
Adelaide SA 5000
Enquiries: David Rowe
david.rowe@sawater.com.au
Ph: (08) 7424 1886
Fax: (08) 7003 1886

21 February 2017

SA Water reference: PS.51.17
Preliminary Plan: 16/0048

Andrew Cameron
Chief Executive Officer
Yorke Peninsula Council
PO Box 57
MAITLAND SA 5573

ROADS OPENING AND CLOSING – PUBLIC ROAD HD OF MAITLAND MAITLAND PP 16/0048

Dear Andrew,

I refer to correspondence in regards to the above matter advertised in the Government Gazette on 16 February 2017. I wish to advise that SA Water has no infrastructure affected and therefore does not require an easement and does not object to the council's proposal.

Should you require any further information in regards to this matter please do not hesitate to contact me.

Regards,

David Rowe
Property Support Officer

Marilyn Mensforth

From: Angela Clark <Angela.Clark@sapowernetworks.com.au>
Sent: Tuesday, 14 March 2017 2:42 PM
To: 'fthompson@maloney.com.au'
Subject: Proposed Road Closing - PPlan 16/0048 Public Road Maitland

Importance: High

Dear Fiona

I refer to earlier communications advising of this proposal.

I advise that SA Power Networks have no infrastructure that will be impacted and accordingly have no objections/requirements.

If you have any queries please do not hesitate to contact me.

Kind regards,

Angela Clark
Easements Manager
Registered Conveyancer

Direct: 08 8404 5897
Mobile: 0433 463 885
Angela.clark@sapowernetworks.com.au
---
1 Anzac Highway, Keswick SA 5035
www.sapowernetworks.com.au

SA Power Networks

****

This email and any file attachments are highly confidential. If you have received this email in error please notify the sender and delete the email. You should note the contents of the email do not necessarily represent the views of SA Power Networks, nor can we guarantee that the email is free of any malicious code. If you have any doubts about the source or authenticity of the email, please contact us on 13 12 61.

****

ElectraNet

Your ref: 16/0048
Our ref:

2 March 2017

Ms Fiona Thompson
Manager – Regulation Compliance & Land Tenure
Maloney Field Services
Level 1, 215 Greenhill Road
Eastwood SA 5063

Dear Fiona

re: Proposed Road Closure – Clasohm Road and Spencer Highway, Maitland
PP 16/0048

I refer to your letter dated 16 February 2017 regarding this proposal.

ElectraNet does not have any assets which will be affected by the proposed road closure. Accordingly, ElectraNet has no objection to the proposal.

Any further queries, please do not hesitate to contact me on (08) 8404 7131.

Yours sincerely

Headland

Tamra Headland
Property Services Advisor

ElectraNet Pty Ltd
ABN 41 094 482 416 ACN 094 482 416
Postal Details: PO Box 7096, Hutt Street Post Office, Adelaide, South Australia, 5000
Telephone: +61 8 8404 7966 **Toll Free:** 1800 243 853 **Facsimile:** +61 8 8404 7956
Email: enquiry@electranet.com.au **electranet.com.au**

COMMUNITY ENGAGEMENT PLAN

SF215
Responsible Officer: Business Improvement Officer
Issue Date: 10th June 2015
Next Review Date: June 2019

PROJECT NAME: Road Closure Process - S T Johns Pty Ltd

Stakeholders	Level 2 CONSULT	Responsibility	Status	Evaluation Method
Entire community	Public Notice	Property Tenure Officer	C	Public Notice advertised once copies of the plans and statements of persons affected have been prepared for public inspection by the surveyor. Report back to Council on outcome of community engagement process. Elected members to make decision based on any submissions received.
Entire community	Website	Property Tenure Officer	C	
Entire community	Ability to appear before Council	Property Tenure Officer	C	
Affected residents	Personalised Letter	Property Tenure Officer	C	
Affected businesses	Personalised Letter	Property Tenure Officer	C	

DIRECTOR DEVELOPMENT SERVICES

DA/ITEM 6.4

3. PROPOSED EXPANSION OF BUSH CAMPING LOCATIONS

PURPOSE

To seek approval from Council to lift this matter from the table and resume proceedings at the point of the Live Motion from the 8th March 2017 Council meeting.

RECOMMENDATION

That Council:

1. agree to lift the matter "Proposed Expansion of Bush Camping Locations" from the table for further consideration by Elected Members
2. resume the point of debate with the live motion under consideration below;

Cr Headon moved Cr Bittner seconded

That Council endorse the commencement of the public consultation in relation to the inclusion of bush camping sites on the foreshore at Parsons Beach and Wauraltee Beach.

LINK TO STRATEGIC PLAN

Goal:	1 Economically Prosperous Peninsula
Strategy:	1.3 Improve visitor experiences, infrastructure, signage, information and support

BACKGROUND

The Bush Camping Working Party (the Party) at its meeting on the 8th February 2017, discussed the opportunity to open new camp sites within the district to enhance the bush camping experience for visitors to the Yorke Peninsula. A copy of the original report is attached for information (Attachment1).

Item 4.2 of the 8th February 2017 Bush Camping Working Party Minutes recommended the following motion be adopted by Council:-

Cr Naomi Bittner moved Cr Adam Myer seconded

It is recommended that Council endorse proceeding to a community engagement process to formalise both Parsons Beach and Wauraltee Beach for the purpose of bush camping.

CARRIED

DISCUSSION

At the 8th March 2017 Council meeting, Council moved the live motion, prior to a formal motion to lay the matter on the table. At the 12th April 2017 Bush Camping Working Party meeting, discussion resumed in relation to the necessity to formalise Parsons and Wauraltee Beaches for the purpose of bush camping.

The Party gave further consideration to various factors such as resource issues and By Laws. Upon reflection, the Party agreed it may have been premature in recommending to

commence public consultation until other factors have been considered in further detail. However, consideration needs to be given to the fact that there is a Live Motion before Council and therefore, the Party moved and seconded the following motion.

Cr Scott Hoyle moved and Cr Tania Stock seconded

That Council reconsider the report DA/DS/R3 Proposed Expansion of bush Camping Locations, presented at the 8th March 2017 meeting of Council, until the Bush Camping Working Party has given further consideration to formalising Parsons and Wauraltee beaches for the purpose of bush camping.

CARRIED

The Working Party would like the opportunity to take time to give further consideration to the various aspects associated with formalising Parsons and Wauraltee beaches and seek Council's support to officially cease commencing a public consultation process.

COMMUNITY ENGAGEMENT PLAN

Community Engagement Plan Level 1 – Inform.

CONSULTATION PROCESS

In preparing this report, the following Yorke Peninsula Council officers were consulted:

- Director Development Services
- Senior Compliance Officer

In preparing this report, the following External Parties were consulted:

- Bush Camping Working Party

POLICY IMPLICATIONS

POO57 Community Engagement Policy

BUDGET AND RESOURCE IMPLICATIONS

Nil

RISK/LEGAL/LEGISLATIVE IMPLICATIONS

Local Government Act 1999

Local Government Land By-law 2013

ATTACHMENTS

Attachment 1: Proposed Expansion of Bush Camping Report Presented to March 2017 Council Meeting.

DIRECTOR DEVELOPMENT SERVICES

DA/ITEM 6.4

3. PROPOSED EXPANSION OF BUSH CAMPING LOCATIONS

PURPOSE

To seek endorsement from Council to undertake community consultation regarding the opening of two bush camping sites within the district.

RECOMMENDATION

That Council endorse the commencement of public consultation in relation to the inclusion of bush camping sites on the foreshore at Parsons Beach and Wauraltee Beach.

LINK TO STRATEGIC PLAN

Goal: 1 Economically Prosperous Peninsula

Strategy: 1.3 Improve visitor experiences, infrastructure, signage, information and support

BACKGROUND

The Bush Camping Working Party (The Working Party) at its meeting on the 8th February 2017, discussed the opportunity to open new camp sites within the district to enhance the bush camping experience for visitors to the Yorke Peninsula.

Item 4.2 of the Bush Camping Working Party Minutes recommends the following motion be adopted:-

Cr Naomi Bittner moved Cr Adam Myer seconded

It is recommended that Council endorse proceeding to a community engagement process to formalise both Parsons Beach and Wauraltee Beach for the purpose of bush camping.

CARRIED

DISCUSSION

The definition of Local Government land pursuant to by-law 2 of 2013, includes all land owned by the Council or under Council's care, control and management (except roads). The foreshore area is included as Local Government land pursuant to this by-law.

Pursuant to Council's by-law, a person must not without the permission of Council, camp or sleep overnight on Local Government land, other than in an area which has been designated and set aside by the Council for that purpose and, in accordance with any conditions that may be determined by resolution of the Council and contained in any signage erected therein.

The Working Party has identified unauthorised camping on the foreshores at Wauraltee Beach and Parsons Beach. These two foreshores have been a popular camping place, particularly at Christmas and other long weekends for families for many years. The Working Party is working to achieve sustainable bush camping that preserves our natural

environment and provides a quality visitor experience through enhancing camp ground facilities and creating a welcoming bush camping 'brand'. Refer to Attachment 1 and 2.

As these two foreshore locations are existing unauthorised bush camping locations, The Working Party believes that Council should seek community input with the view of gazetting these two locations as authorised bush camping sites. A similar consultation process was undertaken last year in relation to Port Minlacowie, Len Barker Reserve, Foul Bay Boat Ramp and Parara, which are now gazetted bush camping sites.

Council currently allows bush camping at The Gap, The Bamboos, Tiparra Rocks, Wauraltee Beach (off the foreshore), Barkers Rocks, Port Minlacowie, Len Barker Reserve, Burners Beach, Gravel Bay, Swincers Rocks, Gleesons Landing, Daly Head, Foul Bay Boat Ramp, Foul Bay, Sturt Bay, Mozzie Flat, Goldsmiths Beach, Wattle Point and Parara.

The Working Party has identified the following sites as possible designated camping areas.

Parsons Beach foreshore
Assessment Number 321562 Lot 15 Hd Minlacowie CR 5748/219

Wauraltee Beach foreshore
Assessment Number 31062 Sec 288 Hd Wauraltee CR 5769/591

The above two parcels of land on the foreshore are owned by the Minister for Sustainability, Environment and Conservation. It appears that due to the erosion of the sand dunes by the tidal waters, the foreshore area extends into these two parcels of land. Council currently does not have a licence to enact our by-laws over this land. As part of the consultation, Council would need to enter into a licence agreement with the owner of the land so that Council's Local Government Land by-law can be applied to these foreshore areas.

The Working Party proposes that the bush camping fee as per Councils fees and charges will apply to these two new locations.

COMMUNITY ENGAGEMENT PLAN

Community Engagement Plan Level 2 – Consult

CONSULTATION PROCESS

In preparing this report, the following Yorke Peninsula Council officers were consulted:

- Director Development Services
- Senior Compliance Officer

In preparing this report, the following External Parties were consulted:

- Kelledy Jones Lawyers
- Bush Camping Working Party

POLICY IMPLICATIONS

POO57 Community Engagement Policy

BUDGET AND RESOURCE IMPLICATIONS

The proposed is an opportunity to offset resources and ongoing expenses required to financially sustain bush camping locations and facilities. There will be an annual cost of $360 for Council to obtain a licence from the Crown for Council to be able to enforce its by-laws for the two portions of land. A one off application fee of $407 will also be charged by the Crown to acquire the licence.

RISK/LEGAL/LEGISLATIVE IMPLICATIONS

Local Government Act 1999

Local Government Land By-law 2013

ATTACHMENTS

Attachment 1: Parsons Beach Map.

Attachment 2: Wauraltee Beach Map.

Attachment 3: Community Engagement Plan.

DIRECTOR DEVELOPMENT SERVICES

DA/ITEM 6.4

4. BUSH CAMPING WORKING PARTY

PURPOSE

For Council to receive the Minutes of Council's Bush Camping Working Party meeting, held 12th April 2017.

RECOMMENDATION

That Council receive the Minutes of the Bush Camping Working Party meeting held on Wednesday 12th April 2017.

LINK TO STRATEGIC PLAN

Goal: 1 Economically Prosperous Peninsula

Strategy: 1.3 Improve visitor experiences, infrastructure, signage, information and support

BACKGROUND

As a result of an internal audit and subsequent recommendations from the Audit Committee in September 2014, the Bush Camping Working Party was established in April 2016, to address the recommendations.

DISCUSSION

Attached are the Minutes of the Bush Camping Working Party meeting held on 12th April 2017.

The recommendation in Item 4 - 4.1 of the Minutes has not been included in this report as it is the subject of the previous Debate Report - Proposed Expansion of Bush Camping Report.

COMMUNITY ENGAGEMENT PLAN

Level 1 – Inform. Minutes will be available on Councils website.

CONSULTATION PROCESS

In preparing this report, the following Yorke Peninsula Council officers were consulted:

- Director Development Services
- Manager Development Services
- Senior Compliance Officer

In preparing this report, the following External Parties were consulted:

- Bush Camping Working Party

POLICY IMPLICATIONS

Not applicable

BUDGET AND RESOURCE IMPLICATIONS

Consistent with the 2016/17 budget allocation.

RISK/LEGAL/LEGISLATIVE IMPLICATIONS

Local Government Act 1999

National Competition Policy - 1995 Competition Principles Agreement

Council must ensure competitive neutrality principles are applied in accordance with 1995 Competition Principles Agreement.

ATTACHMENTS

Attachment 1: Bush Camping Working Party Minutes.

Yorke Peninsula Council

Minutes of the Meeting of the Bush Camping Working Party

Held on Wednesday 12th April 2017
In the Council Chambers
57 Main Street Minlaton commencing at 3.30pm

(Subject to confirmation)

ITEM 1

1.1 WELCOME

Chairperson Adam Meyer welcomed everyone to the meeting and declared the meeting open at 3.32pm.

1.2 PRESENT

Councillors, Naomi Bittner, Tania Stock, Adam Meyer and Scott Hoyle

Mayor Ray Agnew	
Roger Brooks	Director Development Services
Mick Cartwright	Manager Development Services
Phil Herrmann	Senior Compliance Officer
Stephen Goldsworthy	Operations Manager
Maddy Pulling	Minute Secretary

1.3 LEAVE OF ABSENCE

1.4 APOLOGIES

Anne Hammond, Wendy Story

1.5 MINUTES OF THE PREVIOUS MEETING - for confirmation.

Cr Scott Hoyle moved Cr Naomi Bittner seconded

That the minutes of the Bush Camping Working Party meeting held on 12th April 2017 as circulated, be confirmed as a true record.

CARRIED

ITEM 2 VISITORS TO THE MEETING

ITEM 3 CORRESPONDENCE

ITEM 4 DEBATE AGENDA

4.1 Discussion ensued in regard to the Debate Report - Proposed Expansion of Bush Camping Locations, presented at the March 2017 Council meeting, with the following motion being moved and seconded.

Cr Headon moved Cr Bittner seconded

That Council endorse the commencement of public consultation in relation to the inclusion of bush camping sites on the foreshore at Parsons Beach and Wauraltee Beach

Prior to a formal motion being moved by Cr Meyer, that the matter lay on the table.

The Party discussed the recommendation of the report, seeking endorsement by Council to commence public consultation for camping at Parsons and Wauraltee Beaches.

The Party further discussed the necessity of formalising Parson and Wauraltee beaches for camping and upon reflection gave consideration to various factors such as resource issues and By Laws. The Party agreed it was premature to pursue a public consultation until other factors have been considered in further detail.

Cr Scott Hoyle moved and Cr Tanya Stock seconded

That Council reconsider the report DA/DS/R3 Proposed Expansion of Bush Camping Locations, presented at the 8th March 2017 meeting of Council, until the Bush Camping Working Party has given further consideration to formalising Parsons and Wauraltee beaches for the purpose of bush camping.

CARRIED

4.2 Two signs for bins/waste removal were presented to the party for discussion.

The Party recommended some minor changes to the signage to be placed at the camp locations. The addition of 'potable water' and 'dump point' wording should be in conjunction with the use of relevant symbols. This signage is to be in a 'sand' colour to make it consistent with all other bush camping signage.

Stephen Goldsworthy advised that the cost for rubbish collection for the 24 bins (6 modules) will be $3,072 per annum which includes additional rubbish collection in holiday periods. This amount needs will need to be included in the 2017/2018 bush camping budget.

4.3 Mick Cartwright advised that he recently met with Cr Hoyle at the Minlaton Town Oval to assess the suitability for the installation of a dump point. Cr Hoyle confirmed that there is power, water and tidy toilet facilities. Mick Cartwright advised consultation will be required as there are several leases involved at the location. The Party clarified that 24 hour overnight stays at the dump points may be considered in future.

Stephen Goldsworthy sought confirmation from the Party for the placement of bin modules in Yorketown. The Party advised that Weaners Flat Reserve would be suitable and that consultation with the relevant local organisations would be appropriate.

4.4 Roger Brooks advised he has spoken to Blackwood Heritage Surveys regarding the high costs associated with the surveying of the Para and Port Minlacowie enviro toilet sites. Roger confirmed that the final quote for the survey of both locations totals approximately $6,000.

4.5 The Party discussed that $25,000 has been allocated for the 2017/2018 bush camping budget and that ongoing operating costs will need to be considered in this budget.

4.4.1 Matters Raised

Nil

ITEM 5 GENERAL BUSINESS

Mick Cartwright confirmed four Statement of Effects have been completed for the (4) four signs to be placed in specific roadside locations. Public consultation will be conducted, with a report then going to Council Development Assessment Panel, then to the Development Assessment Commission to seek concurrence.

The Party were pleased with the bush camping permit figures. As from 1st September 2016 to March 2017, at total of $44,395.00 has been collected in online camping permits.

ITEM 6 NEXT MEETING

ITEM 7 CLOSURE

The meeting closed at 4.35pm

……
Chairperson – Mr Adam Meyer
Wednesday, 10th May 2017

DIRECTOR DEVELOPMENT SERVICES

DA/ITEM 6.4

5. REGULATION OF SHOP TRADING HOURS

PURPOSE

To inform Elected Member of the outcome of Council's submission for the abolition of both the Minlaton and Yorke Peninsula Proclaimed Shopping Districts.

RECOMMENDATION

That the report be received.

LINK TO STRATEGIC PLAN

Goal: 1 Economically Prosperous Peninsula

Strategy: 1.7 Support employment opportunities for our community

BACKGROUND

Following public consultation in June 2016 Council made submissions to the Minister for Industrial Relations under Section 12 of the Shop Trading Hours Act 1977 for the abolition of both the Minlaton and Yorke Peninsula Proclaimed Shopping Districts.

DISCUSSION

Correspondence has been received from the Hon John Rau MP Deputy Premier and Minister for Industrial Relations advising that Minlaton and Yorke Peninsula Proclaimed Shopping Districts have been formally abolished. Details of the proclamation was published in the Government Gazette dated 5 April 2017.

COMMUNITY ENGAGEMENT PLAN

Not applicable

CONSULTATION PROCESS

In preparing this report, the following Yorke Peninsula Council officers were consulted:

- Senior Development Officer

In preparing this report, the following External Parties were consulted:

- Nil

POLICY IMPLICATIONS

Not applicable

BUDGET AND RESOURCE IMPLICATIONS

Not applicable

RISK/LEGAL/LEGISLATIVE IMPLICATIONS

Shop Trading Hours Act

ATTACHMENTS

Attachment 1: Correspondence from the Hon John Rau MP

The Hon John Rau MP

RECEIVED
11 APR 2017
16IR0330

5 April 2017

Government of South Australia

Deputy Premier
Attorney-General
Minister for Justice Reform
Minister for Planning
Minister for Industrial Relations
Minister for Child Protection Reform
Minister for the Public Sector
Minister for Consumer and Business Services
Minister for the City of Adelaide

45 Pirie Street
ADELAIDE SA 5000

GPO Box 464
Adelaide SA 5001
Tel 08 8207 1723
Fax 08 8207 1736

Mr Andrew Cameron
Chief Executive Officer
Yorke Peninsula Council
PO Box 57
MAITLAND SA 5573

Dear Mr Cameron

Thank you for your Council's application seeking to abolish one or more Proclaimed Shopping Districts (PSD) within your Council area.

I am pleased to advise that following my recommendation to His Excellency the Governor, the following PSD have been formally abolished by Proclamation pursuant to section 11(1)(c) of the *Shop Trading Hours Act 1977* (the Act) effective from Wednesday, 5 April 2017:

- **Minlaton**
- **Yorke Peninsula**

I enclose a copy of the Proclamation published in the Gazette for your records.

I would appreciate if you could ensure this information is conveyed to all local retailers and other interested parties within your Council area.

Thank you for your assistance in this matter.

Yours sincerely

John Rau
Deputy Premier
Minister for Industrial Relations

encl.

DIRECTOR DEVELOPMENT SERVICES

DA/ITEM 6.4

6. SETTING OF DOG REGISTRATION FEES AND CHARGES

PURPOSE

For Council to consider the setting of new fees and charges in line with the Dog and Cat Management Regulations 2017 that commence on 1st July 2017.

RECOMMENDATION

That Council adopt the following fee schedule in relation to dog registrations commencing 1 July 2017:

Standard dog - $40 (Desexed and microchipped)

Non-standard dog - $80

Desexed dog - $40

Working Livestock Dog - $40

Assistance dog - Free

Pensioner/Concession Rebate

To be 50% of the applicable fee for Standard, Non Standard and Desexed dogs only and applies to a maximum of two dogs per property.

Business Registration - $80 per dog

Transfer of registration - $5

Replacement Disc - $2

Fee for late registrations - $20

Fee for impound - $70 during normal working hours, $110 after hours

Daily pound fee - $20

Dogs under 3 months of age as of 1st January receive 50% rebate

LINK TO STRATEGIC PLAN

Goal:	5 Responsible Governance
Strategy:	5.3 Meet all legislative requirements and compliance with Council's internal controls

BACKGROUND

The current fee schedule adopted by Council in relation to the registering of dogs commenced on 1st July 2014. Prior to any changes in registration fees, the Minister was required to approve a resolution of Council to adjust those fees.

As of 1st July 2017 there will be significant legislative changes to the Dog and Cat Management Act 1995 (The Act) and subsequently Council will need to set new fees in line with these changes. Under the new legislation Councils can set fees and charges at their own discretion, no longer requiring the approval of the Minister pursuant to The Act.

DISCUSSION

Under current legislation Councils are able to set a maximum fee of $85 for the registration of a dog and shall provide a rebate for a desexed, trained and microchipped dog. Council currently has set a maximum fee of $70 and offers a 50% discount for a desexed dog and 10% discount for a microchipped dog as well as a trained dog. If more than one rebate is applicable, they are added together and subtracted from the maximum fee. Although Council has set the maximum fee of $70, the average fee paid to resister a dog is approximately $26.

Legislation also states that any dog accredited as a guide, hearing or disability dog is free of charge.

All dog registrations expire on 30th June and need to be renewed by 31st August so as to remain registered. To encourage dog owners to register their dogs on time, Council has also set a $20 late payment fee. This fee is usually only added about 10 days after the due date of the renewal.

Council also currently offers other discounts which include a 50% reduction of the fee payable for Concession card holders. Council has also set a fee of $20 for a racing greyhound. In the previous Dog Control Act Regulations1990, it was compulsory for a Council to offer a special rebate for a registered racing greyhound and many Councils continued this fee when setting their fees under the current Act.

Council also has a fee for a working dog of $20, which is also a carryover from the previous Dog Control Act Regulations 1990. A large percentage of dogs currently registered with Council, are registered as working dogs.

The owner or operator of a business involving dogs can also apply to a Council to register their dogs as a business. Council can set a one off fee that applies to a business registration or can set a fee for any individual dog registered within that business. If a business registers a dog in this manner, the dog that relates to this registration may change during the duration of the registration. Currently, Council has set business registration fees the same as a normal full registration fee of $70.

Council has also set the following fees in relation to dogs that have been endorsed by the Minister.

Transfer of Registration	$5
Replacement disc	$2
Pound fee - normal working hours	$60
Pound fee – after hours	$100

As of 1st July 2017, Council is required to have a registration fee for a standard dog and a non-standard dog. A standard dog is one that is desexed and microchipped whilst a non-standard dog is not desexed and microchipped. Council may also set other fees at their discretion. The Dog and Cat Management Board need to be advised of any resolution of Council in relation to any fees set pursuant to The Act.

The costs associated with implementing the Dog and Cat Management exceed the income derived from dog fees and charges. The projected dog registration income for the 2016/17 financial year is $75,000.

As from 1st July 2018, all dogs (and cats) must be desexed by 6 months of age, or within 28 days of acquirement. Exemptions can be obtained from the mandatory desexing. Working Livestock Dogs are given an automatic exemption to mandatory desexing. With the mandatory introduction of compulsory desexing and microchipping it is forecast that less dog owners will pay the maximum registration fee, resulting in a reduction of income received by Councils for dog registrations.

As of 1st July 2017, the maximum fee a Council can set for a non-standard dog is $100. Using the 2105/16 data, of the 2745 dogs that were registered, 940 will be eligible to be registered as a standard dog as they are desexed and microchipped. This data also shows that 560 dogs that are now desexed and currently receive a 50% reduction on their dog registration, will need to pay the full registration fee as their dog is not microchipped. During the next 12 months a media campaign will be undertaken to educate dog owners they need to now have their dogs both desexed and microchipped to receive the discount they previously received by having their dogs desexed. Council Officers suggest that Council offer a discount in the next financial year for dogs that are only desexed so that the dog owner has ample opportunity to get their dog microchipped within the next 12 months.

COMMUNITY ENGAGEMENT PLAN

Nil

CONSULTATION PROCESS

In preparing this report, the following Yorke Peninsula Council officers were consulted:

- Manager Development Services
- Senior Compliance Officer

POLICY IMPLICATIONS

Nil

BUDGET AND RESOURCE IMPLICATIONS

The costs associated with dog administering management far exceed the income received. It is also believed that with the mandatory desexing and microchipping of dogs will result in less dogs paying the maximum fee, which will result in a reduction in revenue received from dog registrations.

RISK/LEGAL/LEGISLATIVE IMPLICATIONS

Dog and Cat Management Act

Local Government Act

ATTACHMENTS

Nil

DIRECTOR DEVELOPMENT SERVICES

DA/ITEM 6.4

7. REVOCATION OF COMMUNITY LAND BLACK POINT – ALLOTMENT 201

PURPOSE

To consider additional submissions received in relation to the extended community engagement process for the revocation of Community Land classification and to further consider the revocation of community land for the purpose of selling property at Black Point.

RECOMMENDATION A

That Council:

1. receive the 13 written submissions from authors of the original submissions and the 12 new submissions received from Black Point property owners in response to the extension of the community engagement process for the proposed revocation of community land.
2. give approval to proceed with seeking Ministerial approval for the revocation of Community Land classification over the Council owned property located on Black Point Road, Black Point, being Allotment 201, Plan 41613, Certificate of Title: Volume 5294 Folio 896.
3. authorise the Mayor and Chief Executive Officer to sign and affix Council's Common seal to the relevant documents necessary to execute the revocation, transfer of properties and licence.

OR

RECOMMENDATION B

1. receive the 13 written submissions from authors of the original submissions and the 12 new submissions received from Black Point property owners in response to the extension of the community engagement process for the proposed revocation of community land.
2. do not proceed with seeking Ministerial approval for the revocation of Black Point, Allotment 201, Plan 41613, Certificate of Title: Volume 5294 Folio 896.

LINK TO STRATEGIC PLAN

Goal:	1 Economically Prosperous Peninsula
Strategy:	1.2 Deliver strategic and responsible land use planning
Goal:	5 Responsible Governance
Strategy:	5.3 Meet all legislative requirements and compliance with Council's internal controls

BACKGROUND

The Local Government Act 1999, establishes a framework for the classification of most land owned by a Council or under a Councils care, control and management (local government land) as 'community land'.

The framework aims to ensure a consistent, strategic and flexible approach to the administration and management of local government land. Its objectives are to protect community interests in land for current and future generations.

It is important to note that the Council is the instigator of this proposal to revoke the classification of community land, and as such, it is ultimately the Council that is responsible and accountable to its community for the decisions it makes.

The Act seeks to ensure that members of the community are involved in the revocation process, and to provide them with an opportunity to make submissions which Council must consider.

The Act sets out the process the Council must follow to revoke the community land classification of land. The process for revoking community land classification exists to give scope to the Council to determine (in consultation with its community) whether the community's long-term interest in a parcel of land does or does not need to be protected.

The Council must, before revoking the community land classification of land as community land make publicly available a report containing the matters prescribed in Section 194(2)(a) of the Act.

At the Council meeting of 8th February 2017, the Debate Report, DA Item 6.4 - Revocation of Community Land Allotment 201, was presented (Attachment 1A – refer to Separate Cover document), along with the 26 submissions received from the community engagement process.

Council provided the authors of the written submissions the opportunity to make a verbal submission, of which five people presented at the February 2017 Council meeting. Having considered the submissions, Council deferred the matter for further consideration to the May 2017 Council meeting.

DISCUSSION

At the public Elected Members Workshop held on 22nd March 2017, Elected Members reviewed and analysed all submissions in further detail. The key issues identified from the written and verbal submissions were presented along with detailed comments by Council Officers.

On 7th April 2017, Council wrote to the authors of the 26 submissions and all other Black Point property owners to offer them further opportunity to submit either a written or a verbal submission to the 10th May Council meeting, particularly in relation to the Key Issues and Council Comments document (Attachment 2 – refer to Separate Cover document), which was also presented at the above mentioned Elected Members Workshop. As a result, Council has received 13 submissions from the authors of the original 26 submissions and 12 new submissions from property owners who had not made a previous submission (Attachment 3 – refer to Separate Cover document).

After considering all the public submissions, Council may resolve to seek Ministerial approval for the proposal. Only then can an application be made to the Minister. Council cannot delegate the power to make an application to the Minister, this must be a resolution of Council.

If the Minister approves the proposal, the Council may then (but is not required to) make a resolution revoking the classification of the Land as community land.

Officers are recommending that Council either proceed with seeking Ministerial approval for the revocation of Community Land classification over Allotment 201, Black Point Road, Black Point or cease the proposed revocation process.

COMMUNITY ENGAGEMENT PLAN

Community Engagement Plan Level 2 – Consult.

Further engagement undertaken from the 7th April to 26th April 2017 (Attachment 4 – refer to Separate Cover document). Black Point property owners were offered the opportunity to submit a further submission in relation to the identified Key Issues and Council Comments document.

CONSULTATION PROCESS

In preparing this report, the following Yorke Peninsula Council officers were consulted:

- Corporate Management Team
- Property Tenure Officer

In preparing this report, the following External Parties were consulted:

- Nil
- Nil

POLICY IMPLICATIONS

PO072 Disposal of Land and Other Assets

PO057 Community Engagement Policy

BUDGET AND RESOURCE IMPLICATIONS

No budget implications during the revocation process excepting signage and postage costs which were absorbed in existing budgets. Should the revocation proceed and land is listed for sale, the following costs are anticipated (at the time of writing this report).

- Approximately $4,000 – Conveyancer fees including LMA for each allotment.
- Approximately $10,600 – Development Application fees including Development Assessment Commission Application, consulting, drafting, surveying & administration include monitoring of development application and work following the approval.

RISK/LEGAL/LEGISLATIVE IMPLICATIONS

Local Government Act 1999 Section 194 (2)(a) and Section 201 (2)(iii).

ATTACHMENTS

Attachment 1A: Separate Cover - Debate Report and Attachments to February 2017 Council Meeting – Allotment 201, Black Point.

Attachment 2: Separate Cover - Key Issues and Council Comments document.

Attachment 3: Separate Cover - Summary of Submissions and Submissions Received from Extended Consultation.

Attachment 4: Separate Cover - Community Engagement Plan.

DIRECTOR DEVELOPMENT SERVICES

DA/ITEM 6.4

8. REVOCATION OF COMMUNITY LAND BLACK POINT – ALLOTMENT 202

PURPOSE

To consider additional submissions received in relation to the extended community engagement process for the revocation of Community Land classification and to further consider the revocation of community land for the purpose of selling property at Black Point.

RECOMMENDATION A

That Council:

1. receive the 13 written submissions from authors of the original submissions and the 12 new submissions received from Black Point property owners in response to the extension of the community engagement process for the proposed revocation of community land.
2. give approval to proceed with seeking Ministerial approval for the revocation of Community Land classification over the Council owned property located on Black Point Road, Black Point, being Allotment 202, Plan 41613, Certificate of Title: Volume 5294 Folio 897.
3. authorise the Mayor and Chief Executive Officer to sign and affix Council's Common seal to the relevant documents necessary to execute the revocation, transfer of properties and licence.

OR

RECOMMENDATION B

1. receive the 13 written submissions from authors of the original submissions and the 12 new submissions received from Black Point property owners in response to the extension of the community engagement process for the proposed revocation of community land.
2. do not proceed with seeking Ministerial approval for the revocation of Black Point, Allotment 201, Plan 41613, Certificate of Title: Volume 5294 Folio 897.

LINK TO STRATEGIC PLAN

Goal:	1 Economically Prosperous Peninsula
Strategy:	1.2 Deliver strategic and responsible land use planning
Goal:	5 Responsible Governance
Strategy:	5.3 Meet all legislative requirements and compliance with Council's internal controls

BACKGROUND

The Local Government Act 1999, establishes a framework for the classification of most land owned by a Council or under a Councils care, control and management (local government land) as 'community land'.

The framework aims to ensure a consistent, strategic and flexible approach to the administration and management of local government land. Its objectives are to protect community interests in land for current and future generations.

It is important to note that the Council is the instigator of this proposal to revoke the classification of community land, and as such, it is ultimately the Council that is responsible and accountable to its community for the decisions it makes.

The Act seeks to ensure that members of the community are involved in the revocation process, and to provide them with an opportunity to make submissions which Council must consider.

The Act sets out the process the Council must follow to revoke the community land classification of land. The process for revoking community land classification exists to give scope to the Council to determine (in consultation with its community) whether the community's long-term interest in a parcel of land does or does not need to be protected.

The Council must, before revoking the community land classification of land as community land make publicly available a report containing the matters prescribed in Section 194(2)(a) of the Act.

At the Council meeting of 8th February 2017, the Debate Report, DA Item 6.4 - Revocation of Community Land Allotment 202, was presented (Attachment 1B – refer to Separate Cover document), along with the 26 submissions received from the community engagement process.

Council provided the authors of the written submissions the opportunity to make a verbal submission, of which five people presented at the February 2017 Council meeting. Having considered the submissions, Council deferred the matter for further consideration to the May 2017 Council meeting.

DISCUSSION

At the public Elected Members Workshop held on 22nd March 2017, Elected Members reviewed and analysed all submissions in further detail. The key issues identified from the written and verbal submissions were presented along with detailed comments by Council Officers.

On 7th April 2017, Council wrote to the authors of the 26 submissions and all other Black Point property owners to offer them further opportunity to submit either a written or a verbal submission to the 10th May Council meeting, particularly in relation to the Key Issues and Council Comments document (Attachment 2 – refer to Separate Cover document), which was also presented at the above mentioned Elected Members Workshop. As a result, Council has received 13 submissions from the authors of the original 26 submissions and 12 new submission form property owners who had not made a previous submission (Attachment 3 – refer to Separate Cover document).

After considering all the public submissions, Council may resolve to seek Ministerial approval for the proposal. Only then can an application be made to the Minister. Council cannot delegate the power to make an application to the Minister, this must be a resolution of Council.

If the Minister approves the proposal, the Council may then (but is not required to) make a resolution revoking the classification of the Land as community land.

Officers are recommending that Council either proceed with seeking Ministerial approval for the revocation of Community Land classification over Allotment 202, Black Point Road, Black Point or cease the proposed revocation process.

COMMUNITY ENGAGEMENT PLAN

Community Engagement Plan Level 2 – Consult.

Further engagement undertaken from the 7th April to 26th April 2017 (Attachment 4 – refer to Separate Cover document). Black Point property owners were offered the opportunity to submit a further submission in relation to the identified Key Issues and Council Comments document.

CONSULTATION PROCESS

In preparing this report, the following Yorke Peninsula Council officers were consulted:

- Corporate Management Team
- Property Tenure Officer

In preparing this report, the following External Parties were consulted:

- Nil
- Nil

POLICY IMPLICATIONS

PO072 Disposal of Land and Other Assets

PO057 Community Engagement Policy

BUDGET AND RESOURCE IMPLICATIONS

No budget implications during the revocation process excepting signage and postage costs which were absorbed in existing budgets. Should the revocation proceed and land is listed for sale, the following costs are anticipated (at the time of writing this report).

- Approximately $4,000 – Conveyancer fees including LMA for each allotment.
- Approximately $10,600 – Development Application fees including Development Assessment Commission Application, consulting, drafting, surveying & administration include monitoring of development application and work following the approval.

RISK/LEGAL/LEGISLATIVE IMPLICATIONS

Local Government Act 1999 Section 194 (2)(a) and Section 201 (2)(iii).

ATTACHMENTS

Attachment 1B: Separate Cover - Debate Report and Attachments to February 2017 Council Meeting – Allotment 202, Black Point.

Attachment 2: Separate Cover -Key Issues and Council Comments document.

Attachment 3: Separate Cover - Summary of Submissions and Submissions Received from Extended Consultation.

Attachment 4: Separate Cover - Community Engagement Plan.

DIRECTOR DEVELOPMENT SERVICES

DA/ITEM 6.4

9. REVOCATION OF COMMUNITY LAND BLACK POINT – ALLOTMENT 203

PURPOSE

To consider additional submissions received in relation to the extended community engagement process for the revocation of Community Land classification and to further consider the revocation of community land for the purpose of selling property at Black Point.

RECOMMENDATION A

That Council:

1. receive the 13 written submissions from the previous authors of the original submissions and the 12 new written submissions in response to the extension of the community engagement process for the proposed revocation of community land.
2. give approval to proceed with seeking Ministerial approval for the revocation of Community Land classification over the Council owned property located on Black Point Road, Black Point, being Allotment 203, Plan 41613, Certificate of Title: Volume 5294 Folio 898.
3. authorise the Mayor and Chief Executive Officer to sign and affix Council's Common seal to the relevant documents necessary to execute the revocation, transfer of properties and licence.

OR

RECOMMENDATION B

1. receive the 13 written submissions from authors of the original submissions and the 12 new submissions received from Black Point property owners in response to the extension of the community engagement process for the proposed revocation of community land.
2. do not proceed with seeking Ministerial approval for the revocation of Black Point, Allotment 203, Plan 41613, Certificate of Title: Volume 5294 Folio 898.

LINK TO STRATEGIC PLAN

Goal:	1 Economically Prosperous Peninsula
Strategy:	1.2 Deliver strategic and responsible land use planning
Goal:	5 Responsible Governance
Strategy:	5.3 Meet all legislative requirements and compliance with Council's internal controls

BACKGROUND

The Local Government Act 1999, establishes a framework for the classification of most land owned by a Council or under a Councils care, control and management (local government land) as 'community land'.

The framework aims to ensure a consistent, strategic and flexible approach to the administration and management of local government land. Its objectives are to protect community interests in land for current and future generations.

It is important to note that the Council is the instigator of this proposal to revoke the classification of community land, and as such, it is ultimately the Council that is responsible and accountable to its community for the decisions it makes.

The Act seeks to ensure that members of the community are involved in the revocation process, and to provide them with an opportunity to make submissions which Council must consider.

The Act sets out the process the Council must follow to revoke the community land classification of land. The process for revoking community land classification exists to give scope to the Council to determine (in consultation with its community) whether the community's long-term interest in a parcel of land does or does not need to be protected.

The Council must, before revoking the community land classification of land as community land make publicly available a report containing the matters prescribed in Section 194(2)(a) of the Act.

At the Council meeting of 8th February 2017, the Debate Report, DA Item 6.4 - Revocation of Community Land Allotment 202, was presented (Attachment 1C – see Separate Cover document), along with the 26 submissions received from the community engagement process.

Council provided the authors of the written submissions the opportunity to make a verbal submission, of which five people presented at the February 2017 Council meeting. Having considered the submissions, Council deferred the matter for further consideration to the May 2017 Council meeting.

DISCUSSION

At the public Elected Members Workshop held on 22nd March 2017, Elected Members reviewed and analysed all submissions in further detail. The key issues identified from the written and verbal submissions were presented along with detailed comments by Council Officers.

On 7th April 2017, Council wrote to the authors of the 26 submissions and all other Black Point property owners to offer them further opportunity to submit either a written or a verbal submission to the 10th May Council meeting, particularly in relation to the Key Issues and Council Comments document (Attachment 2 – refer to Separate Cover document), which was also presented at the above mentioned Elected Members Workshop. As a result, Council has received 13 submissions from the authors of the original 26 submissions and 12 new submissions from property owners who had not made a previous submission (Attachment 3 – refer to Separate Cover document).

After considering all the public submissions, Council may resolve to seek Ministerial approval for the proposal. Only then can an application be made to the Minister. Council cannot delegate the power to make an application to the Minister, this must be a resolution of Council.

If the Minister approves the proposal, the Council may then (but is not required to) make a resolution revoking the classification of the Land as community land.

Officers are recommending that Council either proceed with seeking Ministerial approval for the revocation of Community Land classification over Allotment 203, Black Point Road, Black Point or cease the proposed revocation process.

COMMUNITY ENGAGEMENT PLAN

Community Engagement Plan Level 2 – Consult.

Further engagement undertaken from the 7th April to 26th April 2017 (Attachment 4 – refer to Separate Cover document). Black Point property owners were offered the opportunity to submit a further submission in relation to the identified Key Issues and Council Comments document.

CONSULTATION PROCESS

In preparing this report, the following Yorke Peninsula Council officers were consulted:

- Corporate Management Team
- Property Tenure Officer

In preparing this report, the following External Parties were consulted:

- Nil
- Nil

POLICY IMPLICATIONS

PO072 Disposal of Land and Other Assets

PO057 Community Engagement Policy

BUDGET AND RESOURCE IMPLICATIONS

No budget implications during the revocation process excepting signage and postage costs which were absorbed in existing budgets. Should the revocation proceed and land is listed for sale, the following costs are anticipated (at the time of writing this report).

- Approximately $4,000 – Conveyancer fees including LMA for each allotment.
- Approximately $10,600 – Development Application fees including Development Assessment Commission Application, consulting, drafting, surveying & administration include monitoring of development application and work following the approval.

RISK/LEGAL/LEGISLATIVE IMPLICATIONS

Local Government Act 1999 Section 194 (2)(a) and Section 201 (2)(iii).

ATTACHMENTS

Attachment 1C: Separate Cover - Debate Report and Attachments to February 2017 Council Meeting – Allotment 203, Black Point.

Attachment 2: Separate Cover - Key Issues and Council Comments document.

Attachment 3: Separate Cover - Summary of Submissions and Submissions Received from Extended Consultation.

Attachment 4: Separate Cover - Community Engagement Plan.

DIRECTOR DEVELOPMENT SERVICES

DA/ITEM 6.4

10. REVOCATION OF COMMUNITY LAND BLACK POINT – ALLOTMENT 204

PURPOSE

To consider additional submissions received in relation to the extended community engagement process for the revocation of Community Land classification and to further consider the revocation of community land for the purpose of selling property at Black Point.

RECOMMENDATION A

That Council:

1. receive the 13 written submissions from the previous authors of the original submissions and the 12 new written submissions in response to the extension of the community engagement process for the proposed revocation of community land.
2. give approval to proceed with seeking Ministerial approval for the revocation of Community Land classification over the Council owned property located on Black Point Road, Black Point, being Allotment 204, Plan 41613, Certificate of Title: Volume 5294 Folio 899.
3. authorise the Mayor and Chief Executive Officer to sign and affix Council's Common seal to the relevant documents necessary to execute the revocation, transfer of properties and licence.

OR

RECOMMENDATION B

1. receive the 12 written submissions from the previous authors of the original submissions and the 12 new written submissions in response to the extension of the community engagement process for the proposed revocation of community land.
2. do not proceed with seeking Ministerial approval for the revocation of Black Point, Allotment 204, Plan 41613, Certificate of Title: Volume 5294 Folio 899.

LINK TO STRATEGIC PLAN

Goal:	1 Economically Prosperous Peninsula
Strategy:	1.2 Deliver strategic and responsible land use planning
Goal:	5 Responsible Governance
Strategy:	5.3 Meet all legislative requirements and compliance with Council's internal controls

BACKGROUND

The Local Government Act 1999, establishes a framework for the classification of most land owned by a Council or under a Councils care, control and management (local government land) as 'community land'.

The framework aims to ensure a consistent, strategic and flexible approach to the administration and management of local government land. Its objectives are to protect community interests in land for current and future generations.

It is important to note that the Council is the instigator of this proposal to revoke the classification of community land, and as such, it is ultimately the Council that is responsible and accountable to its community for the decisions it makes.

The Act seeks to ensure that members of the community are involved in the revocation process, and to provide them with an opportunity to make submissions which Council must consider.

The Act sets out the process the Council must follow to revoke the community land classification of land. The process for revoking community land classification exists to give scope to the Council to determine (in consultation with its community) whether the community's long-term interest in a parcel of land does or does not need to be protected.

The Council must, before revoking the community land classification of land as community land make publicly available a report containing the matters prescribed in Section 194(2)(a) of the Act.

At the Council meeting of 8th February 2017, the Debate Report, DA Item 6.4 - Revocation of Community Land Allotment 202, was presented (Attachment 1D – see Separate Cover document), along with the 26 submissions received from the community engagement process.

Council provided the authors of the written submissions the opportunity to make a verbal submission, of which five people presented at the February 2017 Council meeting. Having considered the submissions, Council deferred the matter for further consideration to the May 2017 Council meeting.

DISCUSSION

At the public Elected Members Workshop held on 22nd March 2017, Elected Members reviewed and analysed all submissions in further detail. The key issues identified from the written and verbal submissions were presented along with detailed comments by Council Officers.

On 7th April 2017, Council wrote to the authors of the 26 submissions and all other Black Point property owners to offer them further opportunity to submit either a written or a verbal submission to the 10th May Council meeting, particularly in relation to the Key Issues and Council Comments document (Attachment 2 – refer to Separate Cover document), which was also presented at the above mentioned Elected Members Workshop. As a result, Council has received 13 submissions from the authors of the original 26 submissions and 12 new submissions from property owners who had not made a previous submission (Attachment 3 – refer to Separate Cover document).

After considering all the public submissions, Council may resolve to seek Ministerial approval for the proposal. Only then can an application be made to the Minister. Council cannot delegate the power to make an application to the Minister, this must be a resolution of Council.

If the Minister approves the proposal, the Council may then (but is not required to) make a resolution revoking the classification of the Land as community land.

Officers are recommending that Council either proceed with seeking Ministerial approval for the revocation of Community Land classification over Allotment 204, Black Point Road, Black Point or cease the proposed revocation process.

COMMUNITY ENGAGEMENT PLAN

Community Engagement Plan Level 2 – Consult.

Further engagement undertaken from the 7th April to 26th April 2017 (Attachment 4 – refer to Separate Cover document). Black Point property owners were offered the opportunity to submit a further submission in relation to the identified Key Issues and Council Comments document.

CONSULTATION PROCESS

In preparing this report, the following Yorke Peninsula Council officers were consulted:

- Corporate Management Team
- Property Tenure Officer

In preparing this report, the following External Parties were consulted:

- Nil
- Nil

POLICY IMPLICATIONS

PO072 Disposal of Land and Other Assets

PO057 Community Engagement Policy

BUDGET AND RESOURCE IMPLICATIONS

No budget implications during the revocation process excepting signage and postage costs which were absorbed in existing budgets. Should the revocation proceed and land is listed for sale, the following costs are anticipated (at the time of writing this report).

- Approximately $4,000 – Conveyancer fees including LMA for each allotment.
- Approximately $10,600 – Development Application fees including Development Assessment Commission Application, consulting, drafting, surveying & administration include monitoring of development application and work following the approval.

RISK/LEGAL/LEGISLATIVE IMPLICATIONS

Local Government Act 1999 Section 194 (2)(a) and Section 201 (2)(iii).

ATTACHMENTS

Attachment 1D: Separate Cover - Debate Report and Attachments to February 2017 Council Meeting – Allotment 204, Black Point.

Attachment 2: Separate Cover - Key Issues and Council Comments document.

Attachment 3: Separate Cover - Summary of Submissions and Submissions Received from Extended Consultation.

Attachment 4: Separate Cover - Community Engagement Plan.

DIRECTOR ASSETS & INFRASTRUCTURE SERVICES

ITEM 8 – CONFIDENTIAL

1. PURCHASE OF ONE (1) MINIMUM 90KW TRACTOR TENDER 165/2017

PURPOSE

For Elected Members to consider awarding the tender for the purchase of one (1) minimum 90kW tractor (tender number 165/2017).

RECOMMENDATION

Section 90(3)(k) Order

1. That pursuant to Section 90(2) of the Local Government Act 1999, the Council orders that the public be excluded from the meeting with the exception of the Chief Executive Officer, Executive Assistant to the CEO and Mayor, Director Corporate and Community Services, Director Development Services and Director Assets and Infrastructure Services.

   The Council is satisfied that, pursuant to section 90(3)(k) of the Act, the information to be received, discussed or considered in relation to agenda item 8 Purchase of One (1) Minimum 90kW Tractor Tender is confidential information relating to –

   "(1) tenders for the supply of goods, the provision of services or the carrying out of works;"

   Accordingly, the Council is satisfied that the principle which states the meeting be conducted in a place open to the public has been outweighed in the circumstances.

Section 91(7) Order

2. That having considered agenda item 8 Purchase of One (1) Minimum 90kW Tractor Tender in confidence under section 90(2) and (3)(k) of the Local Government Act 1999, the Council, pursuant to section 91(7) of that Act orders that the agenda report, and supporting documentation relevant to agenda item 8 titled Purchase of One (1) Minimum 90kW Tractor Tender be retained in confidence for a period of 12 months.

LINK TO STRATEGIC PLAN

Goal:	5 Responsible Governance
Strategy:	5.3 Meet all legislative requirements and compliance with Council's internal controls

BACKGROUND

As per Yorke Peninsula Council's PO058 Purchasing and Procurement Policy, this report is required for a supplier to be recommended to Council for selection, following an open tendering purchase method for the purchase of one (1) minimum 90kW tractor.

DISCUSSION

It is recommended that the public be excluded for consideration of this item to enable consideration in confidence under Section 90(3)(k) of the Local Government Act.

COMMUNITY ENGAGEMENT PLAN

As the report is for Council to consider and report in confidence, it has not been necessary to engage with the community on this occasion.

CONSULTATION PROCESS

In preparing this report, the following Yorke Peninsula Council officers were consulted:

- Chief Executive Officer

In preparing this report, the following External Parties were consulted:

- Nil

POLICY IMPLICATIONS

PO058 - Purchasing and Procurement Policy

BUDGET AND RESOURCE IMPLICATIONS

Not applicable

RISK/LEGAL/LEGISLATIVE IMPLICATIONS

Sections 90 and 91 - Local Government Act 1999

ATTACHMENTS

Nil