I hereby give notice that the Council Assessment Panel Meeting will be held on:

Date:	**Tuesday, 27 February 2024**
Time:	**9.30am**
Location:	**Council Chambers**
	Minlaton Town Hall
	57 Main Street
	Minlaton

AGENDA

Council Assessment Panel Meeting

27 February 2024

Dustin Guthberg
ASSESSMENT MANAGER

Yorke Peninsula Council
Assessment Panel Membership

Debra Agnew – Presiding Member

Ben Green

Peter Allen

Stephen Horsell

Jordan Hunt

Richard Carruthers

Kylie Gray

CONFLICT OF INTEREST

Council Assessment Panel Members are reminded of the requirements for disclosure by Members of direct or indirect personal or pecuniary interest in an item listed for consideration on the Agenda. Section 56A of the Development Act 1993 requires that Members declare any interest and provide full and accurate details of the relevant interest to the Council Assessment Panel prior to consideration of that item on the Agenda.

Each Member of a Council Assessment Panel has a duty to vote at all meetings unless excepted by legislation.

The major exception being where a Member has a conflict of interest.

Agenda

1 Welcome by Presiding Member 5
2 Present 5
3 Gallery 5
4 Apologies 5
5 Leave of Absence 5
6 Minutes of Previous Meeting – for Confirmation 5
7 Conflict of Interest 5
8 Visitors to the Meeting 5
REPORTS 7
9 Development Applications 8
9.1 23024982 - 45 Corny Point Road - Corny Point 8
10 Matters Deferred 115
Nil
11 Review of Decision of Assessment Manager 115
Nil
12 ERD Court Matters 115
Nil
13 Concurrence Approvals 115
14 Procedural Matters 115
Nil
15 Next Meeting 115
16 Closure 115

1 WELCOME BY PRESIDING MEMBER

Meeting declared open

2 PRESENT

3 GALLERY

4 APOLOGIES

Nil

5 LEAVE OF ABSENCE

Nil

6 MINUTES OF PREVIOUS MEETING – FOR CONFIRMATION

Council Assessment Panel Meeting - 25 July 2023

7 CONFLICT OF INTEREST

8 VISITORS TO THE MEETING

Report Item 9.1 – 23024982 – 45 Corny Point Road – Corny Point

Representors wishing to be heard;

Craig Barret
Robert Smoker

Applicant to respond.

REPORTS

REPORTS

9 DEVELOPMENT APPLICATIONS

9.1 23024982 - 45 CORNY POINT ROAD - CORNY POINT

Document #: 24/14210

Department: Development Services

PROPOSAL OUTLINE

Author:	**Georgina Halman**
Application No.:	**23024982**
Applicant:	**John and Brooke Day**
Owner:	**Brooke Day**
Development Proposal:	**Dwelling alterations (additional doors & windows) & additions (upper level decks & verandah); Change in use: ground floor garage to living area**
Lodgement Date:	**6 September 2023**
Subject Land:	**45 Corny Point Road, Corny Point, CT Volume 5159 Folio 146**
Zone:	**Rural Settlement**
Nature of Development:	**Code Assessed – Performance Assessed**
Public Notification:	**Yes**
Representations:	**4 received: 2 support with some concerns; 2 opposed – 2 wish to be heard**
Referrals:	**Nil**
Development Plan Version:	**Planning and Design Code – 31/08/2023 – V2023.13**
Development Legislation:	**Planning, Development and Infrastructure Act 2016**

RECOMMENDATION

A. Pursuant to section 107(2)(c) of the Planning, Development and Infrastructure Act 2016, and having undertaken an assessment of the application against the Planning and Design Code, the application is NOT seriously at variance with the provisions of the Planning and Design Code.

B. Development Application Number 23024982 by John and Brooke Day is granted Planning Consent subject to the following conditions:

Condition 1

That except where minor amendments may be required by other relevant Acts, or by conditions imposed by this application, the development is to be established in strict accordance with the endorsed stamped details and plans submitted and all works shall be completed to the reasonable satisfaction of the relevant authority prior to the occupation and/or use of the development.

Condition 2

Stormwater run-off, including surface stormwater generated by the development, shall be managed on site so as not to trespass on to adjoining properties, lie against any

building or create unsanitary conditions. All associated works shall be to the satisfaction of the relevant authority.

Condition 3

The development shall use low-reflective external materials and finishes that blend with, and colours that complement, the surrounding landscape.

Advisory Note 1

No work can commence on this development unless a Development Approval has been obtained. If one or more consents have been granted on this Decision Notification Form, you must not start any site works or building work or change of use of the land until you have received notification that Development Approval has been granted.

Advisory Note 2

Appeal rights – General rights of review and appeal exist in relation to any assessment, request, direction or act of a relevant authority in relation to the determination of this application, including conditions.

Advisory Note 3

This consent or approval will lapse at the expiration of 2 years from its operative date, subject to the below or subject to an extension having been granted by the relevant authority.

Advisory Note 4

Where an approved development has been substantially commenced within 2 years from the operative date of approval, the approval will then lapse 3 years from the operative date of the approval (unless the development has been substantially or fully completed within those 3 years, in which case the approval will not lapse).

Advisory Note 5

The granting of this consent does not absolve the applicant from obtaining all other consents which might be required pursuant to the provision of any other statutes or regulations.

NATURE OF THE DEVELOPMENT

The applicant seeks planning consent for dwelling alterations and additions and a partial change in use (refer to Attachment 2 – Proposed Plans). Specifically, the proposed elements consist of:

- Dwelling alterations – additional doors and windows
- Dwelling additions – upper level decks and an upper level verandah
- Partial change in use – ground floor garage to living area.

The category of development assigned to each of the elements by the *Planning and Design Code* (the Code) is as follows:

- Dwelling alterations – Accepted
- Dwelling additions – Code Assessed – Performance Assessed
- Change of Use – Code Assessed – Deemed to Satisfy

As the application comprises different categories of development, the proposal is required to default to the category requiring the highest level of assessment, being Code Assessed – Performance Assessed development. The Council Assessment Panel is the Relevant Authority for this assessment pathway when the application requires public notification.

DESCRIPTION OF THE PROPOSAL

The proposed dwelling alterations on the ground floor consist of the removal of roller doors, and windows on the south and west elevations and replacement with a new entry door and larger windows, as well as the creation of new window and sliding door openings in the north elevation. These alterations and the addition of internal wall partitions would allow for the garage to become an additional 67.6m² of living area, constituting the change in use portion of the proposal.

On the upper level, windows on the west elevation will be removed while windows on the north elevation will be replaced with larger windows and a sliding door will be added to the east elevation to provide direct access to a new alfresco area.

Existing upper level decks are proposed to be removed and replaced. On the north elevation, a new deck of 28.7m² would span the full length of the elevation and extend its depth by 1.2m toward the northern allotment boundary adjoining the Crown land reserve. The setback of the new deck from the northern boundary would be 0.365m.

On the east elevation, a new 45m² deck is proposed, incorporating an external staircase in the northeastern corner. A 31m² verandah partially enclosed by wall and adjustable aluminium louvres on the east and south elevations is proposed over a portion of the deck on the east elevation. The setback of the new deck, verandah and staircase from the eastern allotment boundary would be 1.105m.

SUBJECT LAND AND LOCALITY

The subject land is Allotment 114 in Deposited Plan 31796, Corny Point, as contained within Certificate of Title Volume 5159 Folio 146, and commonly known as 45 Corny Point Road, Corny Point (refer to Attachment 1 – Location Plan).

The regular shaped allotment is 900m² in area with a depth averaging 42.5m and a width of 21.17m, which fronts Corny Point Road to the south. The northern allotment boundary adjoins a Crown land reserve of approximately 140m in depth with unallocated Crown land and the coast beyond that to the north. The subject land is setback approximately 235m from the coast.

The topography of the allotment slopes upward from Corny Point Road by more than 1m to the level site of the existing built form on the land. The allotment currently contains a two storey detached dwelling located to the rear of the site, an outbuilding (shed) forward of the dwelling, and above ground water tanks between the rear of the shed and the eastern wall of the dwelling. The on-site wastewater system is located to the southwest of the dwelling and will not be impacted by the proposed development.

The subject land is one of eleven allotments in a linear development on the northern side of Corny Point Road, directly to the east of the intersection of Seaview Road and Corny Point Road. The character of development in the locality consists of predominantly two storey detached dwellings located on elevated land at the rear of the sites to take advantage of sea views to the north. Outbuildings closer to the street frontage than their associated dwelling are a predominant feature of the streetscape in the locality.

Remnant native coastal vegetation within Crown land adjoins the linear development to the north and cleared primary production land exists opposite Corny Point Road to the south. West of the locality is the main portion of Corny Point's residential land, bounded by Corny Point Road, Marion Bay Road and Seaview Road. East of the locality are more residential allotments fronting Corny Point Road to the north and south as well as the Corny Point General Store.

PUBLIC NOTIFICATION

The originally proposed plans for this application sought planning consent for an upper level deck extending to the northern allotment boundary and with the length of the structure along that boundary of 19.5m (refer to Attachment 3 – Superseded Plans)

Public notification of the application was required in accordance with Table 5 – Procedural Matters for the Rural Settlement Zone, as the original proposal included a dwelling addition involving a

structure that was proposed to be situated on (or abut) an allotment boundary, and the length of the proposed structure exceeded 11.5m.

The application was notified in accordance with Practice Direction 3 – Notification of Performance Assessed Developments. At the conclusion of the notification period four (4) representations were received as follows:

Name	Property Address	Position	Wishes to be heard
Craig Barrett	43 Corny Point Road, Corny Point	Oppose	Yes
Robert Smoker	47 Corny Point Road, Corny Point	Oppose	Yes
Kym Baum	41 Corny Point Road, Corny Point	Support with some concerns	No
Charlie Tooze	39 Corny Point Road, Corny Point	Support with some concerns	No

The primary points of the representations (refer to Attachment 4 – Representations) are as follows:

- Northern deck proposed to be built to the allotment boundary, contrary to rear setbacks of existing neighbouring development.
- Northern deck would be out of character in the locality.
- Potential impacts of the northern deck on views from, and privacy of, adjoining properties.
- Potential noise impacts from increased use of the northern deck.
- Fire safety of structures on boundaries.
- Building to the northern boundary would set a precedent for future development.

The representations were forwarded to the applicant for consideration and written response has been provided (refer to Attachment 5 – Response to Representations). The response is summarised as follows:

- Plans have been amended reducing the depth of the proposed northern deck from 1.565m to 1.2m, and setback from the northern boundary increased from 0m to 0.365m.
- Northern deck is predominately to provide a walkway/link between the existing northwestern deck and newly proposed eastern deck, and to allow access to the outside of the new windows on the north elevation.
- Dwelling walls and roof line will not be extended north.
- Proposed design, materials and finishes will update the dwelling to be more in character with existing newer dwellings in the locality.
- Northern deck and staircase will have a similar setback from the coast side boundary as the landing and staircase on 39 Corny Point Road.
- Setbacks of existing development in the locality from the northern allotment boundaries varies between properties.
- Proposed screening on the west elevation of the northern deck will provide privacy to dwellings to the west.
- Northern deck and external staircase will be an improved fire safety feature for the site, allowing another point of egress from the upper level of the dwelling.

- Plans have been amended to relocate the proposed external staircase within the north eastern corner of the deck to allow a setback of 1.105m from the eastern allotment boundary (previously proposed on the eastern boundary).

CONSULTATION

Pursuant to schedule 9 of the *Planning, Development and Infrastructure (General) Regulations 2017*, no external referrals were required to be undertaken as part of this planning assessment.

No internal referrals were considered necessary as part of this planning assessment.

ASSESSMENT

Seriously at Variance

Pursuant to Section 107(2) of the Planning, Development and Infrastructure Act 2016, it is recommended that the Yorke Peninsula Council Assessment Panel determine that the proposed development is not Seriously at Variance with the relevant provisions of the Planning Development and Design Code as detailed in Attachment 6.

Building alterations within the Rural Settlement Zone are listed as Accepted development where they do not: increase floor area; exceed existing wall height; exceed existing overall building height; alter the roof profile; or alter an approved privacy screening arrangement or window treatment. Therefore, the proposed alterations to doors and windows do not require any planning assessment.

The change in use of the ground level garage to living area is in keeping with the existing residential use on the site and meets the Deemed to Satisfy provisions for dwelling additions. As the site has existing shedding and uncovered parking space, the removal of the garage from the dwelling will not impact the availability of on-site parking for the development. As such, no further planning assessment of the change in use element is required.

The proposed upper level northern and eastern decks including the external staircase, and the upper level verandah require a performance assessment against the relevant provisions of the *Planning and Design Code* (refer to Attachment 6 – Planning & Design Code Rules).

Rural Settlement Zone

Desired Outcomes of the Rural Settlement Zone seek residential development compatible with a small mixed-use settlement, which contributes to and enhances the local context and development pattern. The proposed decks, staircase and verandah are ancillary to the existing residential use of the site and therefore, are in keeping with the desired local context.

Performance Outcomes for the Zone relevant to the assessment of this proposal relate to setbacks from side and rear allotment boundaries. For side boundaries, the Code seeks a setback of 1.6m between the wall of the upper level verandah enclosure and the eastern boundary. The application proposes a 1.105m setback from this boundary, being a 0.495m shortfall. When assessing the shortfall consideration needs to be given to the associated Performance Outcome (PO 2.4) which seeks the desired setback in order to:

a) establish separation between buildings to complement the established character within a locality; and

b) provide access to natural light and ventilation for neighbours.

The proposed side setback is not considered out of character with existing development in the locality and will not be readily visible in the streetscape given the location of the existing outbuilding on the subject land (refer to Figure 1 below). In relation to access to natural light and ventilation for the neighbouring dwelling to the east, the proposed shortfall in side setback is not considered to have detrimental impact given there will still be approximately 4.6m between dwellings.

Figure 1 – street view of subject land

The proposed rear boundary setback of the development is 0.365m to the upper level deck on the north elevation. The Zone's assessment provisions for rear setbacks (DTS/DPF 2.4) seek that *building walls (except for ancillary buildings and structures) are no closer to the rear boundary of the site than:*

a) 4m for the ground floor of a building

b) 6m for the upper floor of a building.

As can be seen in aerial image overlays (refer to Attachment 1 – Location Plan) and in site photographs taken by the applicant (refer to Attachment 5 – Response to Representations), setbacks of upper level development from rear boundaries in the locality are already well within the 6m sought by DTS/DPF 2.4.

The proposed upper level deck on the north elevation does not include any walls and is considered an ancillary structure in association with the dwelling on the site. As such, the setback distances in DTS/DPF 2.4 should not be strictly applied to this element, the setback of the deck should be considered in context with the existing character of rear setbacks for similar structures in the locality.

Existing structures similar to the proposed deck include the uncovered deck on the northern elevation of adjoining 47 Corny Point Road and the landing and staircase providing access to the north of the dwelling at 39 Corny Point Road (refer to Figure 2 below). These structures were approved with setbacks from the rear boundary of 1m and 0.6m, respectively. The difference in setback between the proposed deck and these existing structures is 0.235m to 0.635m.

Figure 2 – site photographs of existing ancillary structures on the north elevation of dwellings in the locality

The rooflines of the majority of dwellings in the locality are setback approximately 1m from the northern allotment boundaries, with the exception of the dwelling at 49 Corny Point Road, which has a balcony setback of 0.6m and a roofline setback of only 0.15m.

In response to the representations received during the public notification of the application, the applicant has amended their original proposal to reduce the width of the northern deck, moving it off the boundary and making the use of the deck more akin to solely being a walkway. Whilst not being required to consider impact on views of the coast from neighbouring properties – the Code does not contain assessment provisions protecting views – the applicant has sought to address the concerns of neighbours by reducing the deck size and designing it without extending any wall or roofline toward the northern boundary.

For the reasons outlined above, the proposed northern deck is not considered out of character with existing development in the locality, nor is it thought to have unreasonable detrimental impact on the amenity of owners/occupiers in the locality. Accordingly, the proposal adequately meets the relevant assessment provisions of the Rural Settlement Zone.

Native Vegetation Overlay

Assessment provisions of this Overlay are considered adequately met as no native vegetation clearance is proposed and a declaration to that effect has been submitted by the applicant.

Clearance of Overhead Powerlines

Assessment provisions of this Overlay are considered adequately met as no overhead powerlines are located in the vicinity of the proposed development and a declaration to that effect has been submitted by the applicant.

Design

Relevant assessment provisions for Design relate to mitigating direct overlooking from balconies, terraces and decks to habitable rooms and private open space of adjoining residential uses.

The proposed development incorporates a 1.8m high screen on the west elevation of the upper level deck, providing visual privacy to neighbours to the west. Originally, this screening was proposed to span the full depth of the deck, however, it's width has been reduced by the applicant in response to the representors' concerns about maintaining views of the coast.

The proposed deck and verandah to the east of the dwelling will be partially enclosed with solid walls and adjustable aluminium louvres on the east and south elevations to prevent overlooking of adjoining 47 Corny Point Road. It is also noted that there are no habitable room windows in the west elevation of the dwelling on this adjoining property.

The proposal is considered to adequately meet the relevant assessment provisions for Design.

Infrastructure and Renewable Energy Facilities

The proposed development will not be built upon, or encroach within, an area that is, or will be, required for a sewerage system or waste control system. Accordingly, assessment provisions for this section have been met.

Interface between Land Uses

The proposal does not pose any issues of overshadowing habitable room windows, private open space or rooftop solar energy facilities of adjoining development.

Transport, Access and Parking

The proposal, whilst removing undercover car parking spaces from the site with the change in use of the ground floor garage to living area, still adequately meets the requirements of *Table 1 – General Off-Street Car Parking Requirements*. The Table requires detached dwellings with two or more bedrooms to provide two on-site car parking spaces, one of which is to be covered.

CONCLUSION

When assessed against the relevant provisions of the *Planning and Design Code* (the Code) and having regard to the context of the locality and the nature of the proposed development, it is considered that the proposal on balance satisfies the relevant provisions of the Code.

ATTACHMENTS

1. **Location Plan**
2. **Proposed Plans**
3. **Superseded Plans**
4. **Representations**
5. **Response to Representations**
6. **Planning & Design Code Rules**

Attachment 1 - Location Plan - 23024982

2/13/2024, 2:49:59 PM

1:9,028

0 0.05 0.1 0.2 mi

0 0.1 0.2 0.4 km

Owner Details

Map data © OpenStreetMap contributors, Microsoft, Facebook, Inc. and its affiliates, Esri Community Maps contributors, Map layer by Esri

Map data © OpenStreetMap contributors, Microsoft, Facebook, Inc. and its affiliates, Esri Community Maps contributors, Map layer by Esri |

Attachment 1 - Location Plan - 23024982

2/13/2024, 2:53:12 PM

1:2,257

0 0.01 0.03 0.06 mi

0 0.03 0.05 0.1 km

Owner Details

Map data © OpenStreetMap contributors, Microsoft, Facebook, Inc. and its affiliates, Esri Community Maps contributors, Map layer by Esri

Map data © OpenStreetMap contributors, Microsoft, Facebook, Inc. and its affiliates, Esri Community Maps contributors, Map layer by Esri |

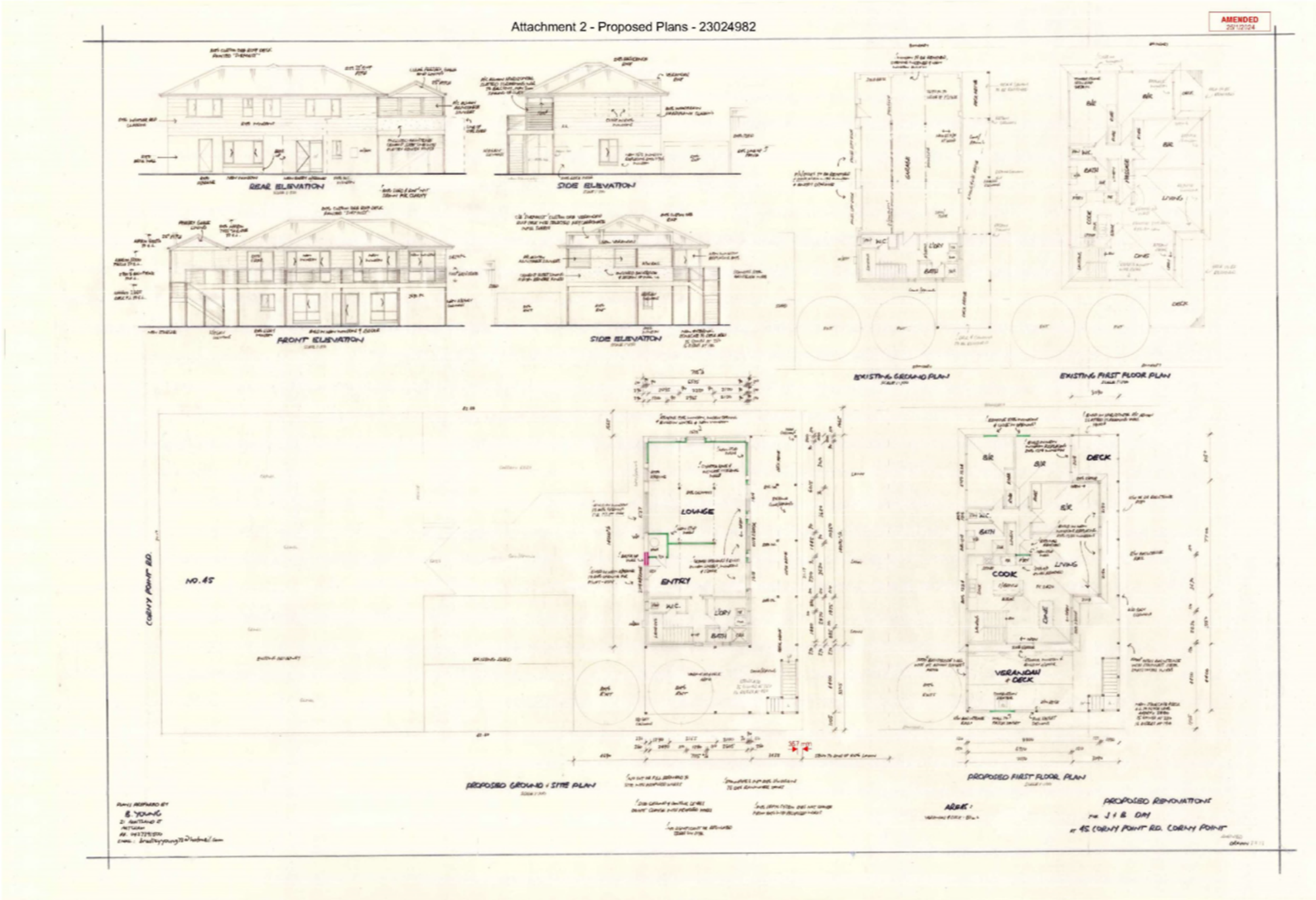
Attachment 2 - Proposed Plans - 23024982
AMENDED
REAR ELEVATION
SIDE ELEVATION
FRONT ELEVATION
SIDE ELEVATION
EXISTING GROUND PLAN
EXISTING FIRST FLOOR PLAN
LOUNGE
ENTRY
W.C.
LDRY
BATH
NO. 45
CORNY POINT RD.
DECK
COOK
LIVING
VERANDAH + DECK
PROPOSED GROUND + SITE PLAN
PROPOSED FIRST FLOOR PLAN
PROPOSED RENOVATIONS
AT 45 CORNY POINT RD. CORNY POINT

Attachment 3 - Superseded Plans - 23024982

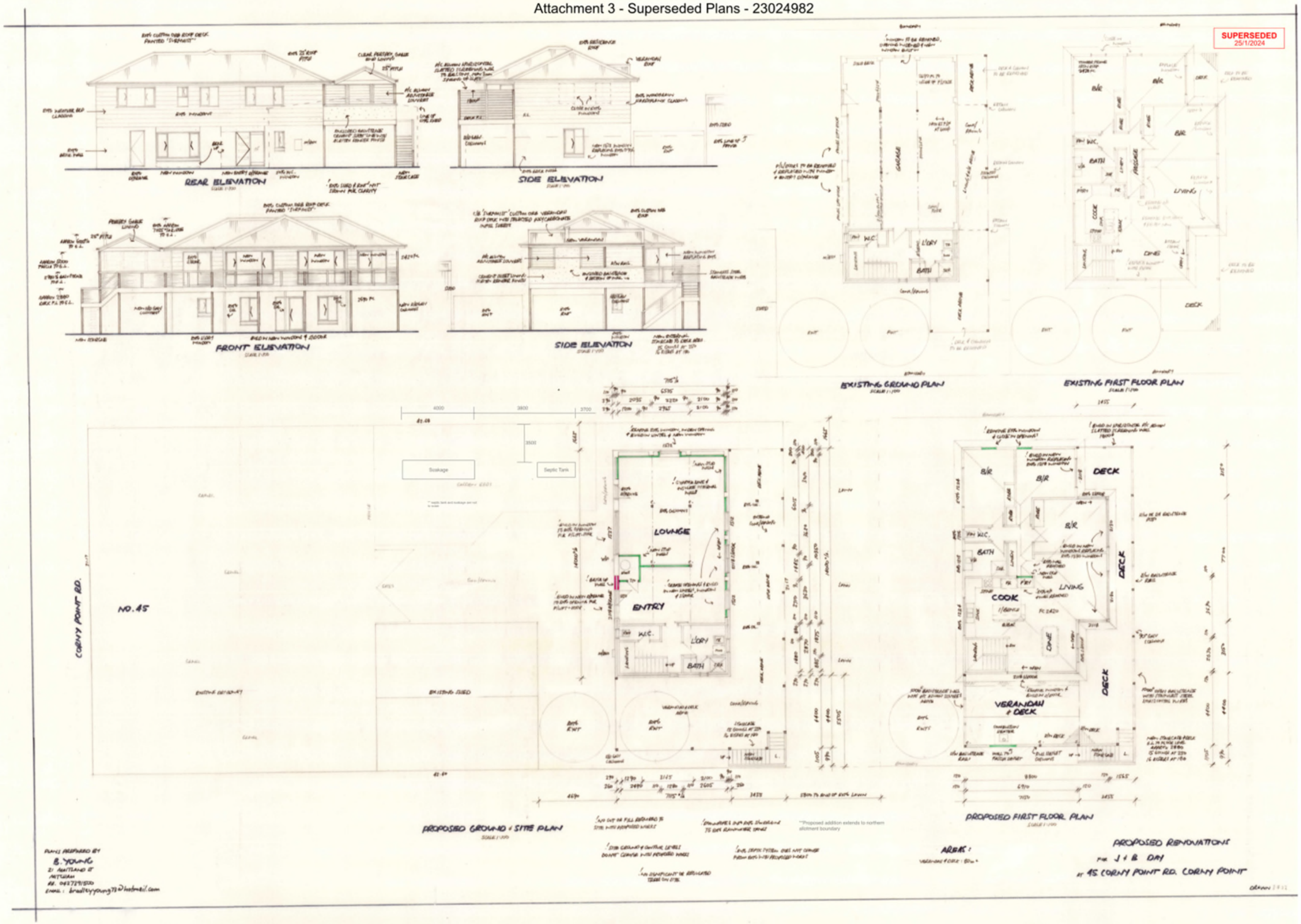

Attachment 4 - Representations - 23024982

Details of Representations

Application Summary

Application ID	23024982
Proposal	Dwelling alterations (additional doors & windows) & additions (upper level decks & verandah); Change in use: ground floor garage to living area
Location	45 CORNY POINT RD CORNY POINT SA 5575

Representations

Representor 1 - Craig Barrett

Name	Craig Barrett
Address	PO Box 17 CORNY POINT SA, 5575 Australia
Submission Date	19/11/2023 03:45 PM
Submission Source	Online
Late Submission	No
Would you like to talk to your representation at the decision-making hearing for this development?	Yes
My position is	I oppose the development

Reasons

As the immediate neighbour (43 corny point rd)and permanent resident I believe consent should be refused. My households objection is to the construction / expansion of existing deck on the north facing (sea side) aspect . There are currently 6 existing houses , 4 of them recently constructed in the last 5 to 10 years . All houses have been built in a line so as to comply with building standards and to not effect the neighbours privacy or view and built to fit the existing character of existing dwellings. I personally set my house back to provide space for my deck so that it did not pass the applicants house or impede any neighbours privacy or view . Both dwellings either side of the applicant are occupied by permanent residence . All houses on this frontage have been designed with open plan and large windows to capture the special view we have .with this in mind all houses have been built in line to maintain privacy , to reduce noise effecting neighbours and to not impede the view . The protruding deck will impact myself and others privacy and view that will in no doubt create anxiety and discomfort to existing residence . It is my belief that all buildings current or to be built in future should remain in line with existing dwellings and not be built out of character with existing dwellings. Thank you Craig and Carolina Barrett

Attached Documents

Representations

Representor 2 - robert smoker

Name	robert smoker
Address	po.box 44 CORNY POINT SA, 5575 Australia
Submission Date	19/11/2023 04:49 PM
Submission Source	Online
Late Submission	No
Would you like to talk to your representation at the decision-making hearing for this development?	Yes
My position is	I oppose the development

Reasons
I believe the planning consent should be refused,as an immediate neighbour and permanent resident my concerns are about the proposed extension and construction of the decking on the north side of dwelling . i believe this is not compliant with laws and regulations that protect privacy safety ie fire and intrusion of view .I believe all dwellings should remain in line without impacting privacy and obstructing view of all the existing dwellings that have complied to a standard as to not impact each other. further concern this may set a precedent with unknown consequences.

Attached Documents

Representations

Representor 3 - Kym Baum

Name	Kym Baum
Address	76 torrdale Rd FARRELL FLAT SA, 5416 Australia
Submission Date	04/12/2023 08:32 PM
Submission Source	Online
Late Submission	No
Would you like to talk to your representation at the decision-making hearing for this development?	No
My position is	I support the development with some concerns
Reasons The proposed deck facing the sea extends up to the boundary which is beyond the existing line of neighbouring houses that have been built to strict council regulations.	

Attached Documents

Representations

Representor 4 - Charlie Tooze

Name	Charlie Tooze
Address	PO Box 32 CORNY POINT SA, 5575 Australia
Submission Date	04/12/2023 08:50 PM
Submission Source	Online
Late Submission	No
Would you like to talk to your representation at the decision-making hearing for this development?	No
My position is	I support the development with some concerns
Reasons The proposed deck facing the sea extends up to the boundary which is beyond the existing line of the neighbouring houses that have been built to strict boundary setback policy and council regulations.	

Attached Documents

Attachment 5 - Response to Representations - 23024982

Regarding the proposed development at 45 Corny Point Road by John and Brooke Day.

After having discussions with our neighbours and taking their concerns on board, we have amended our plan to minimise and reduce the impact on them.

We propose to reorient the steps so that the ground level access is away from the eastern boundary which is shared with Mr Smoker as he verbally expressed concern to us about this. Our new plan will show the steps descend under the northern side of the deck heading away from Mr Smoker's property.

We have also reduced the depth of the proposed walkway in front of the windows from 1565mm to 1200mm to lessen the visual impact of the addition and any effect on privacy or view.

We had intended to have an updated plan included with this response, but due to the time of the year and our Draftsman being on leave, he has not had an opportunity to finish the plan and it won't be available until about January 10th.

The part of our development which is being opposed by our neighbours is the deck on the upper level of our home, particularly on the northern side which would join the two existing small decks on the NE and NW corner of the house and wrap around to the proposed deck on the eastern side.

These are our aims and motivations for the development:

- To change the two main windows on the northern side of the house which are in the open kitchen living area and master bedroom to be floor to ceiling to have a better view towards the sea.

- To have a walkway (1200mm wide) in front of these windows to provide safety in case of a breach of the window from inside and access to the windows from outside.

- The proposed walkway will link the existing small deck on the NW corner of the house to the main proposed outdoor living area on the eastern side providing much more functional use of the area.

- To upgrade and modernise our house to be more in character with the homes of our neighbours which all have large windows to enjoy the view of the sea and a deck on the northern side, protected from the prevailing southwest to southeast winds.

We are not moving walls closer to our property boundary, or extending the roof roof line which has possibly been a misconception by some of our neighbours.

We have addressed the concerns of the neighbours who have submitted a representation to our development below :

1. Craig Barrett.

Mr Barrett opposes our proposal and raises a few issues.

The discussion of these issues can also be related to the other representations for our proposal.

He states that current and new buildings should be in character with existing buildings. The larger windows, the walkway and deck extension with timber and wire balustrade will absolutely bring our house closer to the existing character of his house and the two houses to his west belonging to Mr Baum and Mr Tooze, which all have large windows, and deck areas on the northern side of their property.

He notes that all the houses should be built in a straight line with the others.
Looking at Photo 1, which is taken looking along the wall line of our house, it is clear that the houses to the west of ours are approximately in a straight line.
Mr Barrett is our immediate neighbour, followed by Mr Baum and then Mr Tooze. The landing and steps in the photo are attached to the deck of Mr Tooze's house which we have no issue with and I assume our neighbours also do not have an issue with. Our proposed walkway, deck and stairs would come out to approximately that line.

Photo 1.

Photo 2 shows Mr Smoker's deck being slightly to the north of ours and then the house on the east of his (49 Corny Point rd.) is further to the north again.

Photo 2.

Photo 3 shows pegs in the ground which represent the levels of the homes to our east relative to ours.

The peg on the right indicates the line of Mr Smoker's deck compared to ours.
The middle peg shows the outside line of our proposed development (1200mm).
The peg on the left represents the line of the house at number 49 which can't be seen in this photo because of the trees blocking the view to Mr Smoker's east.

Photo 3.

With this information in mind, we believe there is enough variation in building alignment along these houses that our extension will not significantly impact our neighbours.

Mr Barrett also raises the issue of our development impeding his view and privacy.

This would be referring to the proposed screen on the western end of our deck extension. The screen would serve as privacy for both parties, limiting our view in the direction of the Barrett residence which is one of his concerns.

With this screen in place, it won't impede his view from inside his residence while providing privacy on his deck as well as ours.

The line of pegs in Photo 4 shows the line of the proposed deck relative to his house and ours (the middle peg in the foreground lining up with the pegs inside the line of the boundary fence).

Photo 4.

Mr Barrett has also raised the issue of increased noise impacting neighbours from our development.

We cannot reasonably understand that the presence of this walkway across our house will increase the noise directed at any of our neighbours.

2. Robert Smoker.

Mr Smoker opposes our plan and raises the issues of intrusion of view and privacy.

As shown in Photo 3, our proposed deck would be between the level of Mr Smoker's deck and the deck to his east which isn't visible because of the tree blocking his view.

We have had and continue to have no issues with privacy or view concerning Mr Smoker's property and we believe this would not change.

He also raises the issue of fire safety. Currently we maintain a lawned area on the north side of our house as do most other residents along this strip, which serves as an excellent fire break from the scrubland on the beach side of all of our properties.

Having external steps attached to the proposed development as well as a walkway along the northern aspect of the house will be an important safety measure in the case of a fire in the downstairs area or in the upstairs living area as the walkway will allow egress from the bedrooms and upstairs areas leading to the safety of the outside ground level.

Mr Smoker also states that our development could set a precedent with unknown consequences. We believe he is referring to the precedent of building stairs and a landing or walkway on the northern side of a deck along this group of houses, which has already been done by Mr Tooze as seen in Photo 1, which we do not and will continue to not have an issue with.

3. Kym Baum.

Mr Baum supports the development of our deck.

He raises the point that our deck extends to our boundary and beyond the line of neighbouring houses.

We have reduced the depth of our proposed extension to minimise impact in this regard which also brings the extension back from the boundary.

As seen in Photo 3, our deck will not extend as far as the house at number 49, but this cannot be seen because of the tree limiting the view to the east.

4. Charlie Tooze.

Mr Tooze also supports the development but raises exactly the same concerns as Mr Baum.

As previously stated, we have reduced the depth of our proposed walkway reducing the impact on our neighbours and not extending beyond the line of his existing stairs and landing.

We have included some more photos for reference with notes underneath
Photo 5 : shows the north facing side of our house.

Photo 6 (below) shows the outlook and existing character of the houses to our west (Barrett's, Baum's and Tooze's) with uniform decks protected by privacy screens with timber and wire balustrading all in the same fashion and style of our proposed development.

Attachment 6 - Planning & Design Code Rules - 23024982

Policy24 **P&D Code (in effect) - Version 2023.13 - 31/08/2023**

Address: 45 CORNY POINT RD CORNY POINT SA 5575

Click to view a detailed interactive SAPPA in SAILIS

To view a detailed interactive property map in SAPPA click on the map below

Property Zoning Details

Zone

Rural Settlement

Overlay

Hazards (Bushfire - Urban Interface)
Hazards (Flooding - Evidence Required)
Native Vegetation

Local Variation (TNV)

Minimum Site Area (Minimum site area is 450 sqm)

Development Pathways

- Rural Settlement

1. Accepted Development
   Means that the development type does not require planning consent (planning approval). Please ensure compliance with relevant land use and development controls in the Code.
   - Air handling unit, air conditioning system or exhaust fan
   - Brush fence
   - Building alterations
   - Building work on railway land
   - Carport
   - Outbuilding
   - Partial demolition of a building or structure
   - Private bushfire shelter
   - Shade sail
   - Solar photovoltaic panels (roof mounted)
   - Swimming pool or spa pool and associated swimming pool safety features
   - Temporary public service depot
   - Verandah
   - Water tank (above ground)
   - Water tank (underground)

2. Code Assessed - Deemed to Satisfy
   Means that the development type requires consent (planning approval). Please ensure compliance with relevant land use and development controls in the Code.
   - Ancillary accommodation
   - Carport
   - Deck
   - Detached dwelling
   - Dwelling addition
   - Dwelling or residential flat building undertaken by:
     (a) the South Australian Housing Trust either individually or jointly with other persons or bodies
     or
     (b) a provider registered under the Community Housing National Law participating in a program relating to the renewal of housing endorsed by the South Australian Housing Trust.
   - Outbuilding
   - Replacement building
   - Temporary accommodation in an area affected by bushfire
   - Verandah

3. Code Assessed - Performance Assessed
   Performance Assessed development types listed below are those for which the Code identifies relevant policies.
   Additional development types that are not listed as Accepted, Deemed to Satisfy or Restricted default to a Performance assessed Pathway. Please contact your local council for more information.
   - Advertisement
   - Ancillary accommodation
   - Carport
   - Consulting room
   - Deck
   - Demolition
   - Detached dwelling
   - Dwelling addition
   - Dwelling or residential flat building undertaken by:
     (a) the South Australian Housing Trust either individually or jointly with other persons or bodies
     or
     (b) a provider registered under the Community Housing National Law participating in a program relating to the renewal of housing endorsed by the South Australian Housing Trust.
   - Fence
   - Land division
   - Office
   - Outbuilding
   - Retaining wall
   - Shop
   - Store
   - Tree-damaging activity
   - Verandah
   - Warehouse

4. Impact Assessed - Restricted
   Means that the development type requires approval. Classes of development that are classified as Restricted are listed in Table 4 of the relevant Zones.

Part 2 - Zones and Sub Zones

Rural Settlement Zone

Page 1 of 83 Printed on 9/6/2023

Assessment Provisions (AP)

Desired Outcome (DO)

Desired Outcome	
DO 1	A small mixed-use settlement supporting a limited range of residential development, tourist, recreation and community facilities grouped together to serve the local community and visitors.
DO 2	Development contributes to and enhances the local context and development pattern comprising the settlement.

Performance Outcomes (PO) and Deemed-to-Satisfy (DTS) Criteria / Designated Performance Feature (DPF)

Performance Outcome	Deemed-to-Satisfy Criteria / Designated Performance Feature
Land Use and Intensity	
PO 1.1 Predominantly low density residential development with complementary non-residential uses compatible with a low density residential character and the development pattern of the settlement.	**DTS/DPF 1.1** Development comprises one or more of the following: (a) advertisement (b) carport (c) consulting room (d) detached dwelling (e) dwelling addition (f) light industry (g) office (h) outbuilding (i) shop (j) tourist accommodation (k) verandah (l) warehouse.
PO 1.2 Commercial activities improve community and visitor access to services are of a scale and type to maintain the settlement's residential amenity and character.	**DTS/DPF 1.2** Non-residential commercial activities satisfy any one of the following: (a) shop, consulting room or office (or any combination thereof) located on the same allotment and in conjunction with a dwelling where all the following are satisfied: (i) does not exceed 50m² gross leasable floor area (ii) does not involve the display of goods in a window or about the dwelling or its curtilage (b) shop, consulting room or office (or any combination thereof) where the gross leasable floor area does not exceed 150m² (individually or combined, in a single building) (c) light industry, store or warehouse (or any combination thereof) where the total floor area of a building plus any outdoor space used for a light industry, store or warehouse (or any combination thereof) does not exceed 80m².
PO 1.3 Small-scale tourist accommodation that supports the visiting public and holiday makers.	**DTS/DPF 1.3** None are applicable.
PO 1.4 Local service facilities and retail activities are grouped together or in close proximity to establish identifiable settlement service locations.	**DTS/DPF 1.4** Non-residential development satisfies one of the following: (a) abuts a site containing an existing non-residential use with the same primary street frontage (b) is located on the same allotment and in conjunction with a dwelling.
Bulk Form and Character	
PO 2.1 Buildings are set back from primary street boundaries consistent with the existing streetscape.	**DTS/DPF 2.1** Buildings setback from the primary street boundary in accordance with the following table:

Development Context	Minimum setback
There is an existing building on both abutting sites sharing the same street frontage as the site of the proposed building and the existing building is not on a corner site.	The average setback of the existing buildings.
There is an existing building on only one abutting site sharing the same street frontage as the site of the proposed building and the existing building is not on a corner site.	The setback of the existing building.
There is an existing building on only one abutting site sharing the same street frontage as the site of the proposed building and the existing building is on a corner site.	(a) Where the existing building shares the same primary street frontage – the setback of the existing building (b) Where the existing building has a different primary street frontage - 8m
There is no existing building on either of the abutting sites sharing the same street frontage as the site of the proposed building.	8m

	For the purposes of **DTS/DPF 2.1:** **(a)** the setback of an existing building on an abutting site to the street boundary that it shares with the site of the proposed building is to be measured from the closest building wall to that street boundary at its closest point to the building wall and any existing projection from the building such as a verandah, porch, balcony, awning or bay window is not taken to form part of the building for the purposes of determining its setback **(b)** any proposed projections such as a verandah, porch, balcony, awning or bay window may encroach not more than 1.5 metres into the minimum setback prescribed in the table
PO 2.2 Buildings are set back from a secondary street boundary to maintain a consistent pattern of separation between building walls and public thoroughfares on corner sites within the settlement.	**DTS/DPF 2.2** Building walls are no closer than 2.5 m to the secondary street boundary.
PO 2.3 Buildings (except for ancillary buildings and structures) are set back from rear boundaries to provide: **(a)** access to natural light and ventilation for neighbours **(b)** open space recreational opportunities **(c)** space for landscaping and vegetation.	**DTS/DPF 2.3** Buildings walls (except for ancillary buildings and structures) are no closer to the rear boundary of the site than: **(a)** 4m for the ground floor of a building **(b)** 6m for the upper floor of a building.
PO 2.4 Buildings are set back from side boundaries to: **(a)** establish separation between buildings to complement the established character within a locality **(b)** provide access to natural light and ventilation for neighbours.	**DTS/DPF 2.4** Other than walls located on a side boundary, building walls are set back from side boundaries in accordance with the following: **(a)** where the wall height does not exceed 3m - at least 900mm **(b)** for a wall that is not south facing and the wall height exceeds 3m - at least 900mm from the boundary of the site plus a distance of 1/3 of the extent to which the height of the wall exceeds 3m from the top of the footings **(c)** for a wall that is south facing and the wall height exceeds 3m - at least 1.9m from the boundary of the site plus a distance of 1/3 of the extent to which the height of the wall exceeds 3m from the top of the footings.
PO 2.5 Boundary walls are limited in height and length to mitigate adverse impacts on the amenity of adjoining land users, including through an unreasonable loss of natural light and ventilation.	**DTS/DPF 2.5** For buildings that do not have a common wall, any wall sited on or abutting a side allotment boundary: **(a)** does not exceed 3m in wall height **(b)** does not exceed 11.5m in length **(c)** when combined with other walls on the boundary, does not exceed 45% of the length of the boundary; and **(d)** is set back at least 3m from any existing or proposed boundary walls.
Building Height	
PO 3.1 Buildings contributes to the prevailing character of the neighbourhood and complements the height of nearby buildings.	**DTS/DPF 3.1** Building height (excluding garages, carports and outbuildings) is no greater than: **(a)** the following: **(b)** in all other cases (i.e. there are blank fields for both maximum building height (metres) and maximum building height (levels)) - 2 building levels up to a height of 9m. In relation to DTS/DPF 3.1, in instances where: **(c)** more than one value is returned in the same field, refer to the *Maximum Building Height (Levels) Technical and Numeric Variation layer* or *Maximum Building Height (Metres) Technical and Numeric Variation layer* in the SA planning database to determine the applicable value relevant to the site of the proposed development **(d)** only one value is returned for DTS/DPF 3.1(a) (i.e. there is one blank field), then the relevant height in metres or building levels applies with no criteria for the other.
Site Dimensions and Land Division	
PO 4.1 Allotments are of suitable size and dimension to contribute to a pattern of development that is consistent with the settlement.	**DTS/DPF 4.1** Development will not result in more than 1 dwelling on an existing allotment or Allotments/sites for residential purposes accord with the following: **(a)** where allotments/sites are connected to mains sewer or a Community Wastewater Management System site areas (or allotment areas in the case of land division) are not less than: **Minimum Site Area** Minimum site area is 450 sqm **(b)** where allotments/sites are not connected to mains sewer or an approved common waste water disposal service site areas are not less than the greater of: **(i)** 1200m² **(ii)** the following: **Minimum Site Area** Minimum site area is 450 sqm

(c) site frontages are not less than 20m

In relation to DTS/DPF 4.1, in instances where:

(d) more than one value is returned in the same field, refer to the *Minimum Site Area Technical and Numeric Variation* layer in the SA planning database to determine the applicable value relevant to the site of the proposed development

(e) no value is returned for DTS/DPF 4.1(a) (i.e. there is a blank field), then none are applicable and the relevant development cannot be classified as deemed-to-satisfy

(f) no value is returned for DTS/DPF 4.1(b)(ii) (i.e. there is a blank field), then the value for DTS/DPF 4.1(b)(ii) is zero.

Concept Plans

PO 5.1

Development is compatible with the outcomes sought by any relevant Concept Plan contained within Part 12 - Concept Plans of the Planning and Design Code to support the orderly development of land through staging of development and provision of infrastructure.

DTS/DPF 5.1

The site of the development is wholly located outside any relevant Concept Plan boundary. The following Concept Plans are relevant:

In relation to DTS/DPF 5.1, in instances where:

(a) one or more Concept Plan is returned, refer to Part 12 - Concept Plans in the Planning and Design Code to determine if a Concept Plan is relevant to the site of the proposed development. Note: multiple concept plans may be relevant.

(b) in instances where 'no value' is returned, there is no relevant concept plan and DTS/DPF 5.1 is met.

Ancillary Buildings and Structures

PO 6.1

Residential ancillary buildings are sited and designed to not detract from the streetscape or appearance of primary residential buildings on the site or neighbouring properties.

DTS/DPF 6.1

Ancillary buildings:

(a) are ancillary to a dwelling erected on the same site

(b) have a floor area not exceeding 60m2

(c) are not constructed, added to or altered so that any part is situated:

- (i) in front of any part of the building line of the dwelling to which it is ancillary
- or
- (ii) within 900mm of a boundary of the allotment with a secondary street (if the land has boundaries on two or more roads)

(d) in the case of a garage or carport, the garage or carport:

- (i) is set back at least 5.5m from the boundary of the primary street
- (ii) when facing a primary street or secondary street, has a total door / opening not exceeding:
  - A. for dwellings of single building level - 7m in width or 50% of the site frontage, whichever is the lesser
  - B. for dwellings comprising two or more building levels at the building line fronting the same public street - 7m in width

(e) if situated on a boundary (not being a boundary with a primary street or secondary street), do not exceed a length of 11.5m unless:

- (i) a longer wall or structure exists on the adjacent site and is situated on the same allotment boundary
- and
- (ii) the proposed wall or structure will be built along the same length of boundary as the existing adjacent wall or structure to the same or lesser extent

(f) if situated on a boundary of the allotment (not being a boundary with a primary street or secondary street), all walls or structures on the boundary will not exceed 45% of the length of that boundary

(g) will not be located within 3m of any other wall along the same boundary unless on an adjacent site on that boundary there is an existing wall of a building that would be adjacent to or about the proposed wall or structure

(h) have a wall height or post height not exceeding 3m above natural ground level (and not including a gable end)

(i) have a roof height where no part of the roof is more than 5m above the natural ground level

(j) if clad in sheet metal, is pre-colour treated or painted in a non-reflective colour

(k) retains a total area of soft landscaping in accordance with (i) or (ii), whichever is less:

(i) a total area as determined by the following table:

Dwelling site area (or in the case of residential flat building or group dwelling(s), average site area) (m^2)	Minimum percentage of site
<150	10%
150-200	15%
201-450	20%
>450	25%

(ii) the amount of existing soft landscaping prior to the development occurring.

PO 6.2

Buildings and structures that are ancillary to an existing non-residential use do not detract from the streetscape character, appearance of buildings on the site of the development, or the amenity of neighbouring properties.

DTS/DPF 6.2

Non-residential ancillary buildings and structures:

(a) are ancillary and subordinate to an existing non-residential use on the same site

(b) have a floor area not exceeding the following:

Allotment size	Floor area
≤500m²	60m²
>500m²	80m²

(c) are not constructed, added to or altered so that any part is situated:

(i) in front of any part of the building line of the main building to which it is ancillary

or

(ii) within 900mm of a boundary of the allotment with a secondary street (if the land has boundaries on two or more roads)

(d) in the case of a garage or carport, the garage or carport:

(i) is set back at least 5.5m from the boundary of the primary street

(e) if situated on a boundary (not being a boundary with a primary street or secondary street), do not exceed a length of 11.5m unless:

(i) a longer wall or structure exists on the adjacent site and is situated on the same allotment boundary

(ii) the proposed wall or structure will be built along the same length of boundary as the existing adjacent wall or structure to the same or lesser extent

(f) if situated on a boundary of the allotment (not being a boundary with a primary street or secondary street), all walls or structures on the boundary will not exceed 45% of the length of that boundary

(g) will not be located within 3m of any other wall along the same boundary unless on an adjacent site on that boundary there is an existing wall of a building that would be adjacent to or about the proposed wall or structure

(h) have a wall height (or post height) not exceeding 3m (and not including a gable end)

(i) have a roof height where no part of the roof is more than 5m above the natural ground level

(j) if clad in sheet metal, is pre-colour treated or painted in a non-reflective colour.

Advertisements

PO 7.1	DTS/DPF 7.1
Advertisements identify the associated business activity, and do not detract from the residential character of the locality.	Advertisements relating to a lawful business activity associated with a residential use do not exceed 0.3m2 and mounted flush with a wall or fence.

Table 5 - Procedural Matters (PM) - Notification

The following table identifies, pursuant to section 107(6) of the *Planning, Development and Infrastructure Act 2016*, classes of performance assessed development that are excluded from notification. The table also identifies any exemptions to the placement of notices when notification is required.

Interpretation

Notification tables exclude the classes of development listed in Column A from notification provided that they do not fall within a corresponding exclusion prescribed in Column B.

Where a development or an element of a development falls within more than one class of development listed in Column A, it will be excluded from notification if it is excluded (in its entirety) under any of those classes of development. It need not be excluded under all applicable classes of development.

Where a development involves multiple performance assessed elements, all performance assessed elements will require notification (regardless of whether one or more elements are excluded in the applicable notification table) unless every performance assessed element of the application is excluded in the applicable notification table, in which case the application will not require notification.

A relevant authority may determine that a variation to 1 or more corresponding exclusions prescribed in Column B is minor in nature and does not require notification.

Class of Development (Column A)	Exceptions (Column B)
1. Development which, in the opinion of the relevant authority, is of a minor nature only and will not unreasonably impact on the owners or occupiers of land in the locality of the site of the development.	None specified.
2. Any development involving any of the following (or of any combination of any of the following): (a) ancillary accommodation (b) dwelling (c) dwelling addition (d) temporary public service depot.	Except development that: 1. exceeds the maximum building height specified in Rural Settlement Zone DTS/DPF 3.1 or 2. involves the creation of 4 or more additional dwellings or 3. involves a building wall (or structure) that is proposed to be situated on (or abut) an allotment boundary (not being a boundary with a primary street or secondary street or an excluded boundary) and: (a) the length of the proposed wall (or structure) exceeds 11.5m (other than where the proposed wall abuts an existing wall or structure of greater length on the adjoining allotment) or (b) the height of the proposed wall (or post height) exceeds 3m measured from the top of footings (other than where the proposed wall (or post) abuts an existing wall or structure of greater height on the adjoining allotment).
3. Any development involving any of the following (or of any combination of any of the following): (a) consulting room (b) office (c) shop.	Except development that: 1. exceeds the maximum building height specified in Rural Settlement Zone DTS/DPF 3.1 or 2. does not satisfy Rural Settlement Zone DTS/DPF 1.2(a) or DTS/DPF 1.2(b) or 3. involves a building wall (or structure) that is proposed to be situated on (or abut) an allotment boundary (not being a boundary with a primary street or secondary street or an excluded boundary) and: (a) the length of the proposed wall (or structure) exceeds 11.5m (other than where the proposed wall abuts an existing wall or structure of greater length on the adjoining allotment) or (b) the height of the proposed wall (or post height) exceeds 3m measured from the top of footings (other than where the proposed wall (or post) abuts an existing wall or structure of greater height on the adjoining allotment).
4. Any development involving any of the following (or of any combination of any of the following): (a) light industry	Except development that:

Policy24	P&D Code (in effect) - Version 2023.13 - 31/08/2023
(b) store (c) warehouse.	1. exceeds the maximum building height specified in Rural Settlement Zone DTS/DPF 3.1 or 2. does not satisfy Rural Settlement Zone DTS/DPF 1.2(c) or 3. involves a building wall (or structure) that is proposed to be situated on (or abut) an allotment boundary (not being a boundary with a primary street or secondary street or an excluded boundary) and: (a) the length of the proposed wall (or structure) exceeds 11.5m (other than where the proposed wall abuts an existing wall or structure of greater length on the adjoining allotment) (b) the height of the proposed wall (or post height) exceeds 3m measured from the top of footings (other than where the proposed wall (or post) abuts an existing wall or structure of greater height on the adjoining allotment).
5. Any development involving any of the following (or of any combination of any of the following): (a) air handling unit, air conditioning system or exhaust fan (b) carport (c) deck (d) fence (e) internal building works (f) land division (g) outbuilding (h) pergola (i) private bushfire shelter (j) replacement building (k) retaining wall (l) shade sail (m) solar photovoltaic panels (roof mounted) (n) swimming pool or spa pool and associated swimming pool safety features (o) temporary accommodation in an area affected by bushfire (p) tree damaging activity (q) verandah (r) water tank.	None specified.
6. Demolition.	Except any of the following: 1. the demolition (or partial demolition) of a State or Local Heritage Place (other than an excluded building) 2. the demolition (or partial demolition) of a building in a Historic Area Overlay (other than an excluded building).
7. Railway line.	Except where located outside of a rail corridor or rail reserve.

Placement of Notices - Exemptions for Performance Assessed Development

None specified

Placement of Notices - Exemptions for Restricted Development

None specified

Part 3 - Overlays

Hazards (Bushfire - Urban Interface) Overlay

Assessment Provisions (AP)

Desired Outcome (DO)

	Desired Outcome
DO 1	Urban neighbourhoods that adjoin areas of General, Medium and High Bushfire Risk: (a) allow access through to bushfire risk areas (b) are designed to protect life and property from the threat of bushfire and the dangers posed by ember attack (c) facilitate evacuation to areas safe from bushfire danger.

Performance Outcomes (PO) and Deemed-to-Satisfy (DTS) Criteria / Designated Performance Feature (DPF)

Performance Outcome	Deemed-to-Satisfy Criteria / Designated Performance Feature
Land Division	
PO 1.1	DTS/DPF 1.1

Policy24	P&D Code (in effect) - Version 2023.13 - 31/08/2023
Land division creating public roads or resulting in 10 or more new allotments is designed to make provision for emergency vehicle access through to the bushfire risk area.	Land division creates less than 10 allotments and/or does not involve the creation of public roads.
PO 1.2 Land division is designed to provide a continuous street pattern to facilitate the safe movement and evacuation of emergency vehicles, residents, occupants and visitors.	**DTS/DPF 1.2** Land division does not involve the creation of public roads.
PO 1.3 Where 10 or more new allotments are proposed, land division includes at least two separate and safe exit points to enable multiple avenues of evacuation in the event of a bushfire.	**DTS/DPF 1.3** Land division creates less than 10 allotments.
PO 1.4 Land division creating public roads or resulting in 10 or more new allotments incorporates perimeter roads of adequate design in conjunction with bushfire buffer zones to achieve adequate separation between residential allotments and areas of unacceptable bushfire risk and to support safe access for the purposes of fire-fighting.	**DTS/DPF 1.4** Land division creates less than 10 allotments and/or does not involve the creation of public roads.
PO 1.5 Land division does not rely on fire tracks as means of evacuation or access for fire-fighting purposes unless there are no safe alternatives available.	**DTS/DPF 1.5** Land division does not create or rely on fire tracks.
PO 1.6 Land division resulting in 10 or more new allotments and within 100m a Hazards (Bushfire - General Risk) Overlay, Hazards (Bushfire - Medium Risk) Overlay or Hazards (Bushfire - High Risk) Overlay is designed and incorporates measures to minimise the danger of fire hazard to residents and occupants of buildings, and to protect buildings and property from physical damage in the event of a bushfire.	**DTS/DPF1.6** Land division is not located within 100m of a Hazards (Bushfire - General Risk) Overlay, Hazards (Bushfire - Medium Risk) Overlay or Hazards (Bushfire - High Risk) Overlay or does not create 10 or more new allotments.
Vehicle Access - Roads, Driveways and Fire Tracks	
PO 2.1 Roads that are within 100 metres of a Hazards (Bushfire - General Risk) Overlay, Hazards (Bushfire - Medium Risk) Overlay or Hazards (Bushfire - High Risk) Overlay are designed and constructed to facilitate the safe and effective: **(a)** access, operation and evacuation of fire-fighting vehicles and emergency personnel **(b)** evacuation of residents, occupants and visitors.	**DTS/DPF 2.1** Any proposed new roads are not within 100m of a Hazards (Bushfire - General Risk) Overlay, Hazards (Bushfire - Medium Risk) Overlay or Hazards (Bushfire - High Risk) Overlay or **(a)** are constructed with a formed, all-weather surface **(b)** have a gradient of not more than 16 degrees (1-in-3.5) at any point along the road **(c)** have a cross fall of not more than 6 degrees (1-in-9.5) at any point along the road **(d)** have a minimum formed road width of 6m **(e)** provide overhead clearance of not less than 4.0m between the road surface and overhanging branches or other obstructions including buildings and/or structures (Figure 1) **(f)** allow fire-fighting services (personnel and vehicles) to travel in a continuous forward movement around road curves by constructing the curves with a minimum external radius of 12.5m (Figure 2) **(g)** incorporating cul-de-sac endings or dead end roads do not exceed 200m in length and the end of the road has either: **(i)** a turning area with a minimum formed surface radius of 12.5m (Figure 3) or **(ii)** a "T" or "Y" shaped turning area with a minimum formed surface length of 11m and minimum internal radii of 9.5m (Figure 4) **(h)** incorporate solid, all-weather crossings over any watercourse that support fire-fighting vehicles with a gross vehicle mass (GVM) of 21 tonnes.

Procedural Matters (PM) - Referrals

The following table identifies classes of development / activities that require referral in this Overlay and the applicable referral body. It sets out the purpose of the referral as well as the relevant statutory reference from Schedule 9 of the Planning, Development and Infrastructure (General) Regulations 2017.

Class of Development / Activity	Referral Body	Purpose of Referral	Statutory Reference
None	None	None	None

Figures and Diagrams

Fire Engine and Appliance Clearances
Figure 1 - Overhead and Side Clearances

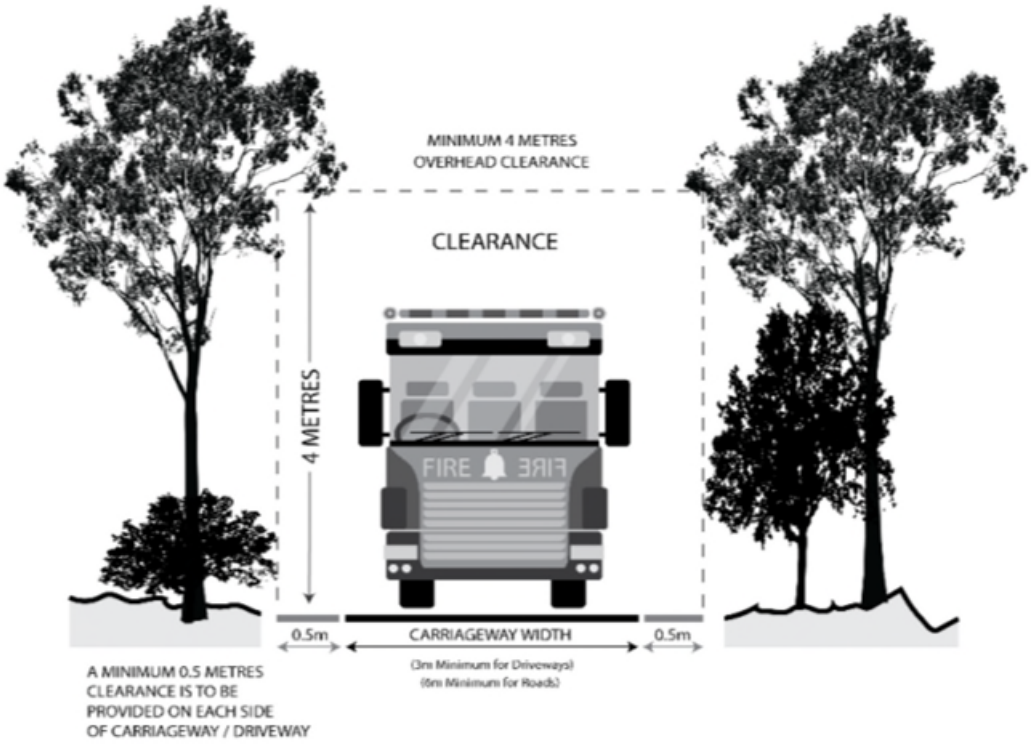

Roads and Driveway Design

Figure 2 - Road and Driveway Curves

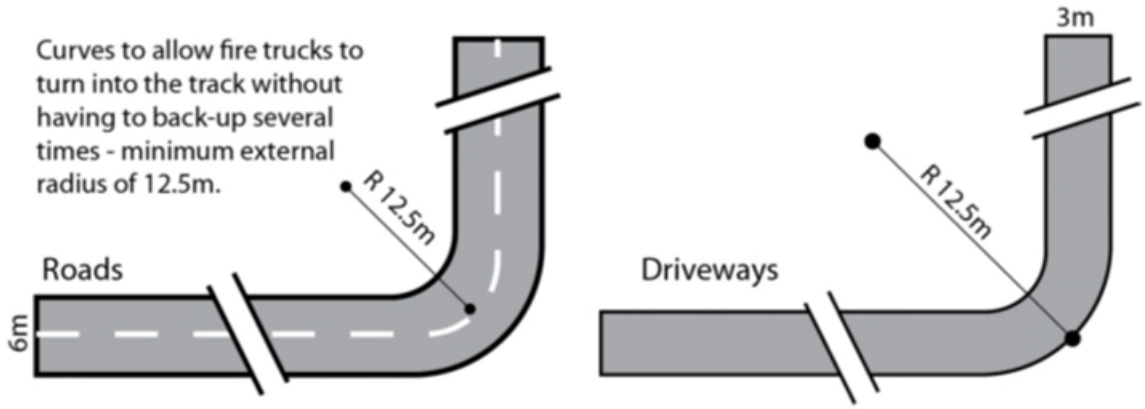

Figure 3 - Full Circle Turning Area

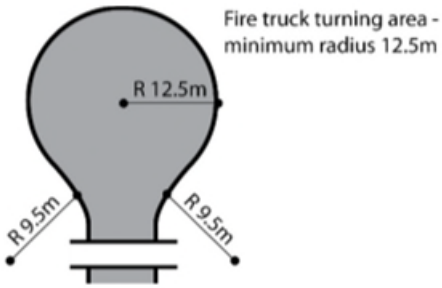

Figure 4 - 'T' or 'Y' Shaped Turning Head

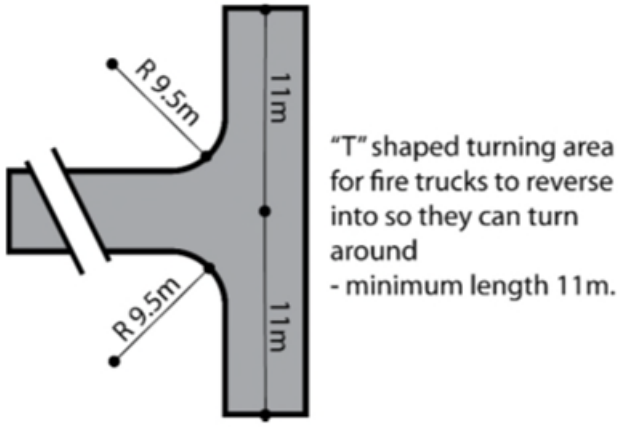

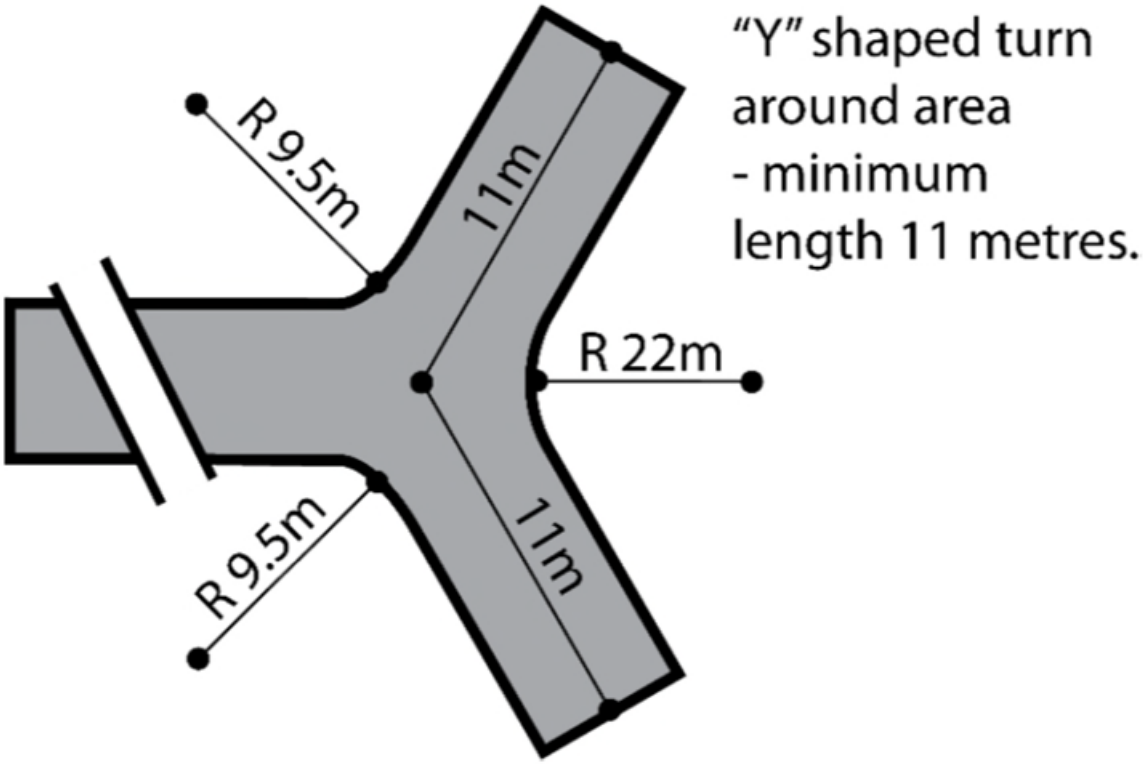

Figure 5 - Driveway Passing Bays

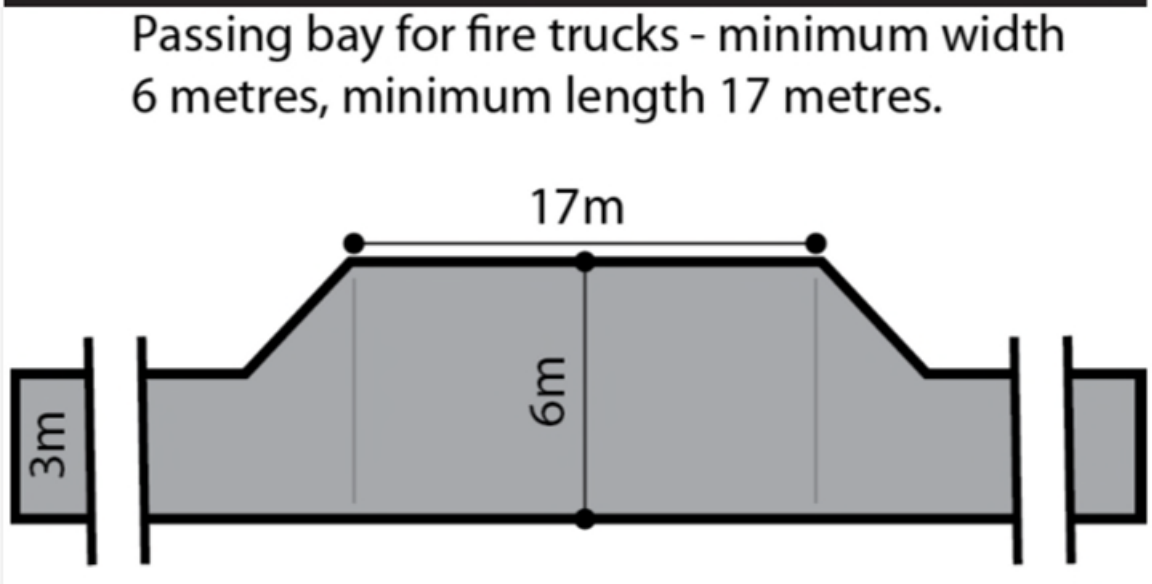

Hazards (Flooding - Evidence Required) Overlay

Assessment Provisions (AP)

Desired Outcome (DO)

Desired Outcome	
DO 1	Development adopts a precautionary approach to mitigate potential impacts on people, property, infrastructure and the environment from potential flood risk through the appropriate siting and design of development.

Performance Outcomes (PO) and Deemed-to-Satisfy (DTS) Criteria / Designated Performance Feature (DPF)

Performance Outcome	Deemed-to-Satisfy Criteria / Designated Performance Feature
Flood Resilience	
PO 1.1 Development is sited, designed and constructed to minimise the risk of entry of potential floodwaters where the entry of flood waters is likely to result in undue damage to or compromise ongoing activities within buildings.	DTS/DPF 1.1 Habitable buildings, commercial and industrial buildings, and buildings used for animal keeping incorporate a finished floor level at least 300mm above: (a) the highest point of top of kerb of the primary street or (b) the highest point of natural ground level at the primary street boundary where there is no kerb
Environmental Protection	
PO 2.1 Buildings and structures used either partly or wholly to contain or store hazardous materials are designed to prevent spills or leaks leaving the confines of the building.	DTS/DPF 2.1 Development does not involve the storage of hazardous materials.

Procedural Matters (PM) - Referrals

The following table identifies classes of development / activities that require referral in this Overlay and the applicable referral body. It sets out the purpose of the referral as well as the relevant statutory reference from Schedule 9 of the Planning, Development and Infrastructure (General) Regulations 2017.

Class of Development / Activity	Referral Body	Purpose of Referral	Statutory Reference
None	None	None	None

Native Vegetation Overlay

Assessment Provisions (AP)

Desired Outcome (DO)

Desired Outcome	
DO 1	Areas of native vegetation are protected, retained and restored in order to sustain biodiversity, threatened species and vegetation communities, fauna habitat, ecosystem services, carbon storage and amenity values.

Performance Outcomes (PO) and Deemed-to-Satisfy (DTS) Criteria / Designated Performance Feature (DPF)

Performance Outcome	Deemed-to-Satisfy Criteria / Designated Performance Feature
Environmental Protection	
PO 1.1 Development avoids, or where it cannot be practically avoided, minimises the clearance of native vegetation taking into account the siting of buildings, access points, bushfire protection measures and building maintenance.	**DTS/DPF 1.1** An application is accompanied by: (a) a declaration stating that the proposal will not, or would not, involve clearance of native vegetation under the Native Vegetation Act 1991, including any clearance that may occur: (i) in connection with a relevant access point and / or driveway (ii) within 10m of a building (other than a residential building or tourist accommodation) (iii) within 20m of a dwelling or addition to an existing dwelling for fire prevention and control (iv) within 50m of residential or tourist accommodation in connection with a requirement under a relevant overlay to establish an asset protection zone in a bushfire prone area or (b) a report prepared in accordance with Regulation 18(2)(a) of the Native Vegetation Regulations 2017 that establishes that the clearance is categorised as 'Level 1 clearance'.
PO 1.2 Native vegetation clearance in association with development avoids the following: (a) significant wildlife habitat and movement corridors (b) rare, vulnerable or endangered plants species (c) native vegetation that is significant because it is located in an area which has been extensively cleared (d) native vegetation that is growing in, or in association with, a wetland environment.	**DTS/DPF 1.2** None are applicable.
PO 1.3 Intensive animal husbandry, commercial forestry and agricultural activities are sited, set back and designed to minimise impacts on native vegetation, including impacts on native vegetation in an adjacent State Significant Native Vegetation Area, from: (a) in the case of commercial forestry, the spread of fires from a plantation (b) the spread of pest plants and phytophthora (c) the spread of non-indigenous plants species (d) excessive nutrient loading of the soil or loading arising from surface water runoff (e) soil compaction (f) chemical spray drift.	**DTS/DPF 1.3** Development within 500 metres of a boundary of a State Significant Native Vegetation Area does not involve any of the following: (a) horticulture (b) intensive animal husbandry (c) dairy (d) commercial forestry (e) aquaculture.
PO 1.4 Development restores and enhances biodiversity and habitat values through revegetation using locally indigenous plant species.	**DTS/DPF 1.4** None are applicable.
Land division	
PO 2.1 Land division does not result in the fragmentation of land containing native vegetation, or necessitate the clearance of native vegetation, unless such clearance is considered minor, taking into account the location of allotment boundaries, access ways, fire breaks, boundary fencing and potential building siting or the like.	**DTS/DPF 2.1** Land division where: (a) an application is accompanied by one of the following: (i) a declaration stating that none of the allotments in the proposed plan of division contain native vegetation under the *Native Vegetation Act 1991* (ii) a declaration stating that no native vegetation clearance under the *Native Vegetation Act 1991* will be required as a result of the division of land (iii) a report prepared in accordance with Regulation 18(2)(a) of the Native Vegetation Regulations 2017 that establishes that the vegetation to be cleared is categorised as 'Level 1 clearance' or (b) an application for land division which is being considered concurrently with a proposal to develop each allotment which will satisfy, or would satisfy, the requirements of DTS/DPF 1.1, including any clearance that may occur or (c) the division is to support a Heritage Agreement under the Native Vegetation Act 1991 or the *Heritage Places Act 1993*.

Procedural Matters (PM) - Referrals

The following table identifies classes of development / activities that require referral in this Overlay and the applicable referral body. It sets out the purpose of the referral as well as the relevant statutory reference from Schedule 9 of the Planning, Development and Infrastructure (General) Regulations 2017.

Class of Development / Activity	Referral Body	Purpose of Referral	Statutory Reference
Development that is the subject of a report prepared in accordance with Regulation 18(2)(a) of the *Native Vegetation Regulations 2017* that categorises the clearance, or potential clearance, as 'Level 3 clearance' or 'Level 4 clearance'.	Native Vegetation Council	To provide expert assessment and direction to the relevant authority on the potential impacts of development on native vegetation.	Development of a class to which Schedule 9 clause 3 item 11 of the Planning, Development and Infrastructure (General) Regulations 2017 applies.

Part 4 - General Development Policies

Advertisements

Assessment Provisions (AP)

Desired Outcome (DO)

Desired Outcome	
DO 1	Advertisements and advertising hoardings are appropriate to context, efficient and effective in communicating with the public, limited in number to avoid clutter, and do not create hazard.

Performance Outcomes (PO) and Deemed-to-Satisfy (DTS) Criteria / Designated Performance Feature (DPF)

Performance Outcome	Deemed-to-Satisfy Criteria / Designated Performance Feature
Appearance	
PO 1.1 Advertisements are compatible and integrated with the design of the building and/or land they are located on.	**DTS/DPF 1.1** Advertisements attached to a building satisfy all of the following: (a) are not located in a Neighbourhood-type zone (b) where they are flush with a wall: (i) if located at canopy level, are in the form of a fascia sign (ii) if located above canopy level: A. do not have any part rising above parapet height B. are not attached to the roof of the building (c) where they are not flush with a wall: (i) if attached to a verandah, no part of the advertisement protrudes beyond the outer limits of the verandah structure (ii) if attached to a two-storey building: A. has no part located above the finished floor level of the second storey of the building B. does not protrude beyond the outer limits of any verandah structure below C. does not have a sign face that exceeds 1m2 per side. (d) if located below canopy level, are flush with a wall (e) if located at canopy level, are in the form of a fascia sign (f) if located above a canopy: (i) are flush with a wall (ii) do not have any part rising above parapet height (iii) are not attached to the roof of the building. (g) if attached to a verandah, no part of the advertisement protrudes beyond the outer limits of the verandah structure (h) if attached to a two-storey building, have no part located above the finished floor level of the second storey of the building (i) where they are flush with a wall, do not, in combination with any other existing sign, cover more than 15% of the building facade to which they are attached.

Policy24	P&D Code (in effect) - Version 2023.13 - 31/08/2023
PO 1.2 Advertising hoardings do not disfigure the appearance of the land upon which they are situated or the character of the locality.	**DTS/DPF 1.2** Where development comprises an advertising hoarding, the supporting structure is: (a) concealed by the associated advertisement and decorative detailing or (b) not visible from an adjacent public street or thoroughfare, other than a support structure in the form of a single or dual post design.
PO 1.3 Advertising does not encroach on public land or the land of an adjacent allotment.	**DTS/DPF 1.3** Advertisements and/or advertising hoardings are contained within the boundaries of the site.
PO 1.4 Where possible, advertisements on public land are integrated with existing structures and infrastructure.	**DTS/DPF 1.4** Advertisements on public land that meet at least one of the following: (a) achieves Advertisements DTS/DPF 1.1 (b) are integrated with a bus shelter.
PO 1.5 Advertisements and/or advertising hoardings are of a scale and size appropriate to the character of the locality.	**DTS/DPF 1.5** None are applicable.
Proliferation of Advertisements	
PO 2.1 Proliferation of advertisements is minimised to avoid visual clutter and untidiness.	**DTS/DPF 2.1** No more than one freestanding advertisement is displayed per occupancy.
PO 2.2 Multiple business or activity advertisements are co-located and coordinated to avoid visual clutter and untidiness.	**DTS/DPF 2.2** Advertising of a multiple business or activity complex is located on a single advertisement fixture or structure.
PO 2.3 Proliferation of advertisements attached to buildings is minimised to avoid visual clutter and untidiness.	**DTS/DPF 2.3** Advertisements satisfy all of the following: (a) are attached to a building (b) other than in a Neighbourhood-type zone, where they are flush with a wall, cover no more than 15% of the building facade to which they are attached (c) do not result in more than one sign per occupancy that is not flush with a wall.
Advertising Content	
PO 3.1 Advertisements are limited to information relating to the lawful use of land they are located on to assist in the ready identification of the activity or activities on the land and avoid unrelated content that contributes to visual clutter and untidiness.	**DTS/DPF 3.1** Advertisements contain information limited to a lawful existing or proposed activity or activities on the same site as the advertisement.
Amenity Impacts	
PO 4.1 Light spill from advertisement illumination does not unreasonably compromise the amenity of sensitive receivers.	**DTS/DPF 4.1** Advertisements do not incorporate any illumination.
Safety	
PO 5.1 Advertisements and/or advertising hoardings erected on a verandah or projecting from a building wall are designed and located to allow for safe and convenient pedestrian access.	**DTS/DPF 5.1** Advertisements have a minimum clearance of 2.5m between the top of the footpath and base of the underside of the sign.
PO 5.2 Advertisements and/or advertising hoardings do not distract or create a hazard to drivers through excessive illumination.	**DTS/DPF 5.2** No advertisement illumination is proposed.
PO 5.3 Advertisements and/or advertising hoardings do not create a hazard to drivers by: (a) being liable to interpretation by drivers as an official traffic sign or signal	**DTS/DPF 5.3** Advertisements satisfy all of the following: (a) are not located in a public road or rail reserve

Policy24	P&D Code (in effect) - Version 2023.13 - 31/08/2023
(b) obscuring or impairing drivers' view of official traffic signs or signals (c) obscuring or impairing drivers' view of features of a road that are potentially hazardous (such as junctions, bends, changes in width and traffic control devices) or other road or rail vehicles at/or approaching level crossings.	(b) are located wholly outside the land shown as 'Corner Cut-Off Area' in the following diagram 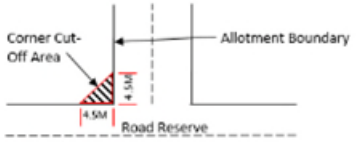
PO 5.4 Advertisements and/or advertising hoardings do not create a hazard by distracting drivers from the primary driving task at a location where the demands on driver concentration are high.	DTS/DPF 5.4 Advertisements and/or advertising hoardings are not located along or adjacent to a road having a speed limit of 80km/h or more.
PO 5.5 Advertisements and/or advertising hoardings provide sufficient clearance from the road carriageway to allow for safe and convenient movement by all road users.	DTS/DPF 5.5 Where the advertisement or advertising hoarding is: (a) on a kerbed road with a speed zone of 60km/h or less, the advertisement or advertising hoarding is located at least 0.6m from the roadside edge of the kerb (b) on an unkerbed road with a speed zone of 60km/h or less, the advertisement or advertising hoarding is located at least 5.5m from the edge of the seal (c) on any other kerbed or unkerbed road, the advertisement or advertising hoarding is located a minimum of the following distance from the roadside edge of the kerb or the seal: (a) 110 km/h road - 14m (b) 100 km/h road - 13m (c) 90 km/h road - 10m (d) 70 or 80 km/h road - 8.5m.
PO 5.6 Advertising near signalised intersections does not cause unreasonable distraction to road users through illumination, flashing lights, or moving or changing displays or messages.	DTS/DPF 5.6 Advertising: (a) is not illuminated (b) does not incorporate a moving or changing display or message (c) does not incorporate a flashing light(s).

Animal Keeping and Horse Keeping

Assessment Provisions (AP)

Desired Outcome (DO)

Desired Outcome	
DO 1	Animals are kept at a density that is not beyond the carrying capacity of the land and in a manner that minimises their adverse effects on the environment, local amenity and surrounding development.

Performance Outcomes (PO) and Deemed-to-Satisfy (DTS) Criteria / Designated Performance Feature (DPF)

Performance Outcome	Deemed-to-Satisfy Criteria / Designated Performance Feature
Siting and Design	
PO 1.1 Animal keeping, horse keeping and associated activities do not create adverse impacts on the environment or the amenity of the locality.	DTS/DPF 1.1 None are applicable.
PO 1.2 Animal keeping and horse keeping is located and managed to minimise the potential transmission of disease to other operations where animals are kept.	DTS/DPF 1.2 None are applicable.
Horse Keeping	
PO 2.1 Water from stable wash-down areas is directed to appropriate absorption areas and/or drainage	DTS/DPF 2.1 None are applicable.

pits to minimise pollution of land and water.	
PO 2.2 Stables, horse shelters or associated yards are sited appropriate distances away from sensitive receivers and/or allotments in other ownership to avoid adverse impacts from dust, erosion and odour.	**DTS/DPF 2.2** Stables, horse shelters and associated yards are sited in accordance with all of the following: (a) 30m or more from any sensitive receivers (existing or approved) on land in other ownership (b) where an adjacent allotment is vacant and in other ownership, 30m or more from the boundary of that allotment.
PO 2.3 All areas accessible to horses are separated from septic tank effluent disposal areas to protect the integrity of that system. Stable flooring is constructed with an impervious material to facilitate regular cleaning.	**DTS/DPF 2.3** Septic tank effluent disposal areas are enclosed with a horse-proof barrier such as a fence to exclude horses from this area.
PO 2.4 To minimise environmental harm and adverse impacts on water resources, stables, horse shelters and associated yards are appropriately set back from a watercourse.	**DTS/DPF 2.4** Stables, horse shelters and associated yards are set back 50m or more from a watercourse.
PO 2.5 Stables, horse shelters and associated yards are located on slopes that are stable to minimise the risk of soil erosion and water runoff.	**DTS/DPF 2.5** Stables, horse shelters and associated yards are not located on land with a slope greater than 10% (1-in-10).
Kennels	
PO 3.1 Kennel flooring is constructed with an impervious material to facilitate regular cleaning.	**DTS/DPF 3.1** The floors of kennels satisfy all of the following: (a) are constructed of impervious concrete (b) are designed to be self-draining when washed down.
PO 3.2 Kennels and exercise yards are designed and sited to minimise noise nuisance to neighbours through measures such as: (a) adopting appropriate separation distances (b) orientating openings away from sensitive receivers.	**DTS/DPF 3.2** Kennels are sited 500m or more from the nearest sensitive receiver on land in other ownership.
PO 3.3 Dogs are regularly observed and managed to minimise nuisance impact on adjoining sensitive receivers from animal behaviour.	**DTS/DPF 3.3** Kennels are sited in association with a permanent dwelling on the land.
Wastes	
PO 4.1 Storage of manure, used litter and other wastes (other than wastewater lagoons) is designed, constructed and managed to minimise attracting and harbouring vermin.	**DTS/DPF 4.1** None are applicable.
PO 4.2 Facilities for the storage of manure, used litter and other wastes (other than wastewater lagoons) are located to minimise the potential for polluting water resources.	**DTS/DPF 4.2** Waste storage facilities (other than wastewater lagoons) are located outside the 1% AEP flood event areas.

Aquaculture

Assessment Provisions (AP)

Desired Outcome (DO)

Desired Outcome	
DO 1	Aquaculture facilities are developed in an ecologically, economically and socially sustainable manner to support an equitable sharing of marine, coastal and inland resources and mitigate conflict with other water-based and land-based uses.

Performance Outcomes (PO) and Deemed-to-Satisfy (DTS) Criteria / Designated Performance Feature (DPF)

Performance Outcome	Deemed-to-Satisfy Criteria / Designated Performance Feature
Land-based Aquaculture	
PO 1.1 Land-based aquaculture and associated components are sited and designed to mitigate adverse impacts on nearby sensitive receivers.	DTS/DPF 1.1 Land-based aquaculture and associated components are located to satisfy all of the following: (a) 200m or more from a sensitive receiver in other ownership (b) 500m or more from the boundary of a zone primarily intended to accommodate sensitive receivers or The development is the subject of an aquaculture lease and/or licence (as applicable) granted under the *Aquaculture Act 2001*.
PO 1.2 Land-based aquaculture and associated components are sited and designed to prevent surface flows from entering ponds in a 1% AEP sea flood level event.	DTS/DPF 1.2 None are applicable.
PO 1.3 Land-based aquaculture and associated components are sited and designed to prevent pond leakage that would pollute groundwater.	DTS/DPF 1.3 The development is the subject of an aquaculture lease and/or licence (as applicable) granted under the *Aquaculture Act 2001*.
PO 1.4 Land-based aquaculture and associated components are sited and designed to prevent farmed species escaping and entering into any waters.	DTS/DPF 1.4 The development is the subject of an aquaculture lease and/or licence (as applicable) granted under the *Aquaculture Act 2001*.
PO 1.5 Land-based aquaculture and associated components, including intake and discharge pipes, are designed to minimise the need to traverse sensitive areas to minimise impact on the natural environment.	DTS/DPF 1.5 None are applicable.
PO 1.6 Pipe inlets and outlets associated with land-based aquaculture are sited and designed to minimise the risk of disease transmission.	DTS/DPF 1.6 The development is the subject of an aquaculture lease and/or licence (as applicable) granted under the *Aquaculture Act 2001*.
PO 1.7 Storage areas associated with aquaculture activity are integrated with the use of the land and sited and designed to minimise their visual impact on the surrounding environment.	DTS/DPF 1.7 None are applicable.
Marine Based Aquaculture	
PO 2.1 Marine aquaculture is sited and designed to minimise its adverse impacts on sensitive ecological areas including: (a) creeks and estuaries (b) wetlands (c) significant seagrass and mangrove communities (d) marine habitats and ecosystems.	DTS/DPF 2.1 None are applicable.
PO 2.2 Marine aquaculture is sited in areas with adequate water current to disperse sediments and dissolve particulate wastes to prevent the build-up of waste that may cause environmental harm.	DTS/DPF 2.2 The development is the subject of an aquaculture lease and/or licence (as applicable) granted under the *Aquaculture Act 2001*.
PO 2.3 Marine aquaculture is designed to not involve discharge of human waste on the site, on any adjacent land or into nearby waters.	DTS/DPF 2.3 The development does not include toilet facilities located over water.
PO 2.4 Marine aquaculture (other than inter-tidal aquaculture) is located an appropriate distance seaward of the high water mark.	DTS/DPF 2.4 Marine aquaculture development is located 100m or more seaward of the high water mark or The development is the subject of an aquaculture lease and/or licence (as applicable) granted under the *Aquaculture Act 2001*.

Policy24	P&D Code (in effect) - Version 2023.13 - 31/08/2023
PO 2.5 Marine aquaculture is sited and designed to not obstruct or interfere with: (a) areas of high public use (b) areas, including beaches, used for recreational activities such as swimming, fishing, skiing, sailing and other water sports (c) areas of outstanding visual or environmental value (d) areas of high tourism value (e) areas of important regional or state economic activity, including commercial ports, wharfs and jetties (f) the operation of infrastructure facilities including inlet and outlet pipes associated with the desalination of sea water.	**DTS/DPF 2.5** None are applicable.
PO 2.6 Marine aquaculture is sited and designed to minimise interference and obstruction to the natural processes of the coastal and marine environment.	**DTS/DPF 2.6** None are applicable.
PO 2.7 Marine aquaculture is designed to be as unobtrusive as practicable by incorporating measures such as: (a) using feed hoppers painted in subdued colours and suspending them as close as possible to the surface of the water (b) positioning structures to protrude the minimum distance practicable above the surface of the water (c) avoiding the use of shelters and structures above cages and platforms unless necessary to exclude predators and protected species from interacting with the farming structures and/or stock inside the cages, or for safety reasons (d) positioning racks, floats and other farm structures in unobtrusive locations landward from the shoreline.	**DTS/DPF 2.7** None are applicable.
PO 2.8 Access, launching and maintenance facilities utilise existing established roads, tracks, ramps and paths to or from the sea where possible to minimise environmental and amenity impacts.	**DTS/DPF 2.8** The development utilises existing established roads, tracks, ramps and/or paths (as applicable) to access the sea.
PO 2.9 Access, launching and maintenance facilities are developed as common user facilities and are co-located where practicable to mitigate adverse impacts on coastal areas.	**DTS/DPF 2.9** The development utilises existing established roads, tracks, ramps and/or paths (as applicable) to access the sea.
PO 2.10 Marine aquaculture is sited to minimise potential impacts on, and to protect the integrity of, reserves under the *National Parks and Wildlife Act 1972*.	**DTS/DPF 2.10** Marine aquaculture is located 1000m or more seaward of the boundary of any reserve under the *National Parks and Wildlife Act 1972*.
PO 2.11 Onshore storage, cooling and processing facilities do not impair the coastline and its visual amenity by: (a) being sited, designed, landscaped and of a scale to reduce the overall bulk and appearance of buildings and complement the coastal landscape (b) making provision for appropriately sited and designed vehicular access arrangements, including using existing vehicular access arrangements as far as practicable (c) incorporating appropriate waste treatment and disposal.	**DTS/DPF 2.11** The development does not include any onshore facilities in conjunction with a proposal for marine aquaculture.
Navigation and Safety	
PO 3.1 Marine aquaculture sites are suitably marked to maintain navigational safety.	**DTS/DPF 3.1** The development is the subject of an aquaculture lease and/or licence (as applicable) granted under the *Aquaculture Act 2001*.
PO 3.2 Marine aquaculture is sited to provide adequate separation between farms for safe navigation.	**DTS/DPF 3.2** The development is the subject of an aquaculture lease and/or licence (as applicable) granted under the *Aquaculture Act 2001*.
Environmental Management	
PO 4.1 Marine aquaculture is maintained to prevent hazards to people and wildlife, including breeding grounds and habitats of native marine mammals and terrestrial fauna, especially migratory species.	**DTS/DPF 4.1** None are applicable.
PO 4.2 Marine aquaculture is designed to facilitate the relocation or removal of structures in the case of emergency such as oil spills, algal blooms and altered water flows.	**DTS/DPF 4.2** None are applicable.
PO 4.3	**DTS/DPF 4.3**

Marine aquaculture provides for progressive or future reclamation of disturbed areas ahead of, or upon, decommissioning.	None are applicable.
PO 4.4 Aquaculture operations incorporate measures for the removal and disposal of litter, disused material, shells, debris, detritus, dead animals and animal waste to prevent pollution of waters, wetlands, or the nearby coastline.	**DTS/DPF 4.4** The development is the subject of an aquaculture lease and/or licence (as applicable) granted under the *Aquaculture Act 2001*.

Beverage Production in Rural Areas

Assessment Provisions (AP)

Desired Outcome (DO)

Desired Outcome	
DO 1	Mitigation of potential amenity and environmental impacts of value-adding beverage production facilities such as wineries, distilleries, cideries and breweries.

Performance Outcomes (PO) and Deemed-to-Satisfy (DTS) Criteria / Designated Performance Feature (DPF)

Performance Outcome	Deemed-to-Satisfy Criteria / Designated Performance Feature
Odour and Noise	
PO 1.1 Beverage production activities are designed and sited to minimise odour impacts on rural amenity.	**DTS/DPF 1.1** None are applicable.
PO 1.2 Beverage production activities are designed and sited to minimise noise impacts on sensitive receivers.	**DTS/DPF 1.2** None are applicable.
PO 1.3 Fermentation, distillation, manufacturing, storage, packaging and bottling activities occur within enclosed buildings to improve the visual appearance within a locality and manage noise associated with these activities.	**DTS/DPF 1.3** None are applicable.
PO 1.4 Breweries are designed to minimise odours emitted during boiling and fermentation stages of production.	**DTS/DPF 1.4** Brew kettles are fitted with a vapour condenser.
PO 1.5 Beverage production solid wastes are stored in a manner that minimises odour impacts on sensitive receivers in other ownership.	**DTS/DPF 1.5** Solid waste from beverage production is collected and stored in sealed containers and removed from the site within 48 hours.
Water Quality	
PO 2.1 Beverage production wastewater management systems (including wastewater irrigation) are set back from watercourses to minimise adverse impacts on water resources.	**DTS/DPF 2.1** Wastewater management systems are set back 50m or more from the banks of watercourses and bores.
PO 2.2 The storage or disposal of chemicals or hazardous substances is undertaken in a manner to prevent pollution of water resources.	**DTS/DPF 2.2** None are applicable.
PO 2.3 Stormwater runoff from areas that may cause contamination due to beverage production activities (including vehicle movements and machinery operations) is drained to an onsite stormwater treatment system to manage potential environmental impacts.	**DTS/DPF 2.3** None are applicable.

Policy24	P&D Code (in effect) - Version 2023.13 - 31/08/2023
PO 2.4 Stormwater runoff from areas unlikely to cause contamination by beverage production and associated activities (such as roof catchments and clean hard-paved surfaces) is diverted away from beverage production areas and wastewater management systems.	DTS/DPF 2.4 None are applicable.
Wastewater Irrigation	
PO 3.1 Beverage production wastewater irrigation systems are designed and located to not contaminate soil and surface and ground water resources or damage crops.	DTS/DPF 3.1 None are applicable.
PO 3.2 Beverage production wastewater irrigation systems are designed and located to minimise impact on amenity and avoid spray drift onto adjoining land.	DTS/DPF 3.2 Beverage production wastewater is not irrigated within 50m of any dwelling in other ownership.
PO 3.3 Beverage production wastewater is not irrigated onto areas that pose an undue risk to the environment or amenity such as: (a) waterlogged areas (b) land within 50m of a creek, swamp or domestic or stock water bore (c) land subject to flooding (d) steeply sloping land (e) rocky or highly permeable soil overlaying an unconfined aquifer.	DTS/DPF 3.3 None are applicable.

Bulk Handling and Storage Facilities

Assessment Provisions (AP)

Desired Outcome (DO)

Desired Outcome	
DO 1	Facilities for the bulk handling and storage of agricultural, mineral, petroleum, rock, ore or other similar commodities are designed to minimise adverse impacts on transport networks, the landscape and surrounding land uses.

Performance Outcomes (PO) and Deemed-to-Satisfy (DTS) Criteria / Designated Performance Feature (DPF)

Performance Outcome	Deemed-to-Satisfy Criteria / Designated Performance Feature
Siting and Design	
PO 1.1 Bulk handling and storage facilities are sited and designed to minimise risks of adverse air quality and noise impacts on sensitive receivers.	DTS/DPF 1.1 Facilities for the handling, storage and dispatch of commodities in bulk (excluding processing) meet the following minimum separation distances from sensitive receivers: (a) bulk handling of agricultural crop products, rock, ores, minerals, petroleum products or chemicals at a wharf or wharf side facility (excluding sea-port grain terminals), where the handling of these materials into or from vessels does not exceed 100 tonnes per day: 300m or more from residential premises not associated with the facility (b) bulk handling of agricultural crop products, rock, ores, minerals, petroleum products or chemicals to or from any commercial storage facility: 300m or more from residential premises not associated with the facility (c) bulk petroleum storage involving individual containers with a capacity up to 200 litres and a total on-site storage capacity not exceeding 1,000 cubic metres: 500m or more (d) coal handling with: a. capacity up to 1 tonne per day or a storage capacity up to 50 tonnes: 500m or more b. capacity exceeding 1 tonne per day but not exceeding 100 tonnes per day or a storage capacity exceeding 50 tonnes but not exceeding 5000 tonnes: 1000m or more.
Buffers and Landscaping	
PO 2.1 Bulk handling and storage facilities incorporate a buffer area for the establishment of dense landscaping adjacent road frontages to enhance the appearance of land and buildings from public thoroughfares.	DTS/DPF 2.1 None are applicable.
PO 2.2	DTS/DPF 2.2

Bulk handling and storage facilities incorporate landscaping to assist with screening and dust filtration.	None are applicable.
Access and Parking	
PO 3.1 Roadways and vehicle parking areas associated with bulk handling and storage facilities are designed and surfaced to control dust emissions and prevent drag out of material from the site.	DTS/DPF 3.1 Roadways and vehicle parking areas are sealed with an all-weather surface.
Slipways, Wharves and Pontoons	
PO 4.1 Slipways, wharves and pontoons used for the handling of bulk materials (such as fuel, oil, catch, bait and the like) incorporate catchment devices to avoid the release of materials into adjacent waters.	DTS/DPF 4.1 None are applicable.

Clearance from Overhead Powerlines

Assessment Provisions (AP)

Desired Outcome (DO)

Desired Outcome	
DO 1	Protection of human health and safety when undertaking development in the vicinity of overhead transmission powerlines.

Performance Outcomes (PO) and Deemed-to-Satisfy (DTS) Criteria / Designated Performance Feature (DPF)

Performance Outcome	Deemed-to-Satisfy Criteria / Designated Performance Feature
PO 1.1 Buildings are adequately separated from aboveground powerlines to minimise potential hazard to people and property.	DTS/DPF 1.1 One of the following is satisfied: (a) a declaration is provided by or on behalf of the applicant to the effect that the proposal would not be contrary to the regulations prescribed for the purposes of section 86 of the *Electricity Act 1996* (b) there are no aboveground powerlines adjoining the site that are the subject of the proposed development.

Design

Assessment Provisions (AP)

Desired Outcome (DO)

Desired Outcome	
DO 1	Development is: (a) contextual - by considering, recognising and carefully responding to its natural surroundings or built environment and positively contributes to the character of the immediate area (b) durable - fit for purpose, adaptable and long lasting (c) inclusive - by integrating landscape design to optimise pedestrian and cyclist usability, privacy and equitable access, and promoting the provision of quality spaces integrated with the public realm that can be used for access and recreation and help optimise security and safety both internally and within the public realm, for occupants and visitors (d) sustainable - by integrating sustainable techniques into the design and siting of development and landscaping to improve community health, urban heat, water management, environmental performance, biodiversity and local amenity and to minimise energy consumption.

Performance Outcomes (PO) and Deemed-to-Satisfy (DTS) Criteria / Designated Performance Feature (DPF)

Performance Outcome	Deemed-to-Satisfy Criteria / Designated Performance Feature
All development	
External Appearance	
PO 1.1	DTS/DPF 1.1

Policy24	P&D Code (in effect) - Version 2023.13 - 31/08/2023
Buildings reinforce corners through changes in setback, articulation, materials, colour and massing (including height, width, bulk, roof form and slope).	None are applicable.
PO 1.2 Where zero or minor setbacks are desirable, development provides shelter over footpaths (in the form of verandahs, awnings, canopies and the like, with adequate lighting) to positively contribute to the walkability, comfort and safety of the public realm.	**DTS/DPF 1.2** None are applicable.
PO 1.3 Building elevations facing the primary street (other than ancillary buildings) are designed and detailed to convey purpose, identify main access points and complement the streetscape.	**DTS/DPF 1.3** None are applicable.
PO 1.4 Plant, exhaust and intake vents and other technical equipment is integrated into the building design to minimise visibility from the public realm and negative impacts on residential amenity by: (a) positioning plant and equipment in unobtrusive locations viewed from public roads and spaces (b) screening rooftop plant and equipment from view (c) when located on the roof of non-residential development, locating the plant and equipment as far as practicable from adjacent sensitive land uses.	**DTS/DPF 1.4** Development does not incorporate any structures that protrude beyond the roofline.
PO 1.5 The negative visual impact of outdoor storage, waste management, loading and service areas is minimised by integrating them into the building design and screening them from public view (such as fencing, landscaping and built form) taking into account the form of development contemplated in the relevant zone.	**DTS/DPF 1.5** None are applicable.
Safety	
PO 2.1 Development maximises opportunities for passive surveillance of the public realm by providing clear lines of sight, appropriate lighting and the use of visually permeable screening wherever practicable.	**DTS/DPF 2.1** None are applicable.
PO 2.2 Development is designed to differentiate public, communal and private areas.	**DTS/DPF 2.2** None are applicable.
PO 2.3 Buildings are designed with safe, perceptible and direct access from public street frontages and vehicle parking areas.	**DTS/DPF 2.3** None are applicable.
PO 2.4 Development at street level is designed to maximise opportunities for passive surveillance of the adjacent public realm.	**DTS/DPF 2.4** None are applicable.
PO 2.5 Common areas and entry points of buildings (such as the foyer areas of residential buildings), and non-residential land uses at street level, maximise passive surveillance from the public realm to the inside of the building at night.	**DTS/DPF 2.5** None are applicable.
Landscaping	
PO 3.1 Soft landscaping and tree planting is incorporated to: (a) minimise heat absorption and reflection (b) maximise shade and shelter (c) maximise stormwater infiltration (d) enhance the appearance of land and streetscapes (e) contribute to biodiversity.	**DTS/DPF 3.1** None are applicable.
PO 3.2 Soft landscaping and tree planting maximises the use of locally indigenous plant species, incorporates plant species best suited to current and future climate conditions and avoids pest plant and weed species.	**DTS/DPF 3.2** None are applicable.
Environmental Performance	

Policy24	P&D Code (in effect) - Version 2023.13 - 31/08/2023
PO 4.1 Buildings are sited, oriented and designed to maximise natural sunlight access and ventilation to main activity areas, habitable rooms, common areas and open spaces.	DTS/DPF 4.1 None are applicable.
PO 4.2 Buildings are sited and designed to maximise passive environmental performance and minimise energy consumption and reliance on mechanical systems, such as heating and cooling.	DTS/DPF 4.2 None are applicable.
PO 4.3 Buildings incorporate climate-responsive techniques and features such as building and window orientation, use of eaves, verandahs and shading structures, water harvesting, at ground landscaping, green walls, green roofs and photovoltaic cells.	DTS/DPF 4.3 None are applicable.
Water Sensitive Design	
PO 5.1 Development is sited and designed to maintain natural hydrological systems without negatively impacting: (a) the quantity and quality of surface water and groundwater (b) the depth and directional flow of surface water and groundwater (c) the quality and function of natural springs.	DTS/DPF 5.1 None are applicable.
On-site Waste Treatment Systems	
PO 6.1 Dedicated on-site effluent disposal areas do not include any areas to be used for, or could be reasonably foreseen to be used for, private open space, driveways or car parking.	DTS/DPF 6.1 Effluent disposal drainage areas do not: (a) encroach within an area used as private open space or result in less private open space than that specified in Design Table 1 - Private Open Space (b) use an area also used as a driveway (c) encroach within an area used for on-site car parking or result in loss on-site car parking than that specified in Transport, Access and Parking Table 1 - General Off-Street Car Parking Requirements or Table 2 - Off-Street Car Parking Requirements in Designated Areas.
Carparking Appearance	
PO 7.1 Development facing the street is designed to minimise the negative impacts of any semi-basement and undercroft car parking on the streetscapes through techniques such as: (a) limiting protrusion above finished ground level (b) screening through appropriate planting, fencing and mounding (c) limiting the width of openings and integrating them into the building structure.	DTS/DPF 7.1 None are applicable.
PO 7.2 Vehicle parking areas are appropriately located, designed and constructed to minimise impacts on adjacent sensitive receivers through measures such as ensuring they are attractively developed and landscaped, screen fenced and the like.	DTS/DPF 7.2 None are applicable.
PO 7.3 Safe, legible, direct and accessible pedestrian connections are provided between parking areas and the development.	DTS/DPF 7.3 None are applicable.
PO 7.4 Street level vehicle parking areas incorporate tree planting to provide shade and reduce solar heat absorption and reflection.	DTS/DPF 7.4 None are applicable.
PO 7.5 Street level parking areas incorporate soft landscaping to improve visual appearance when viewed from within the site and from public places.	DTS/DPF 7.5 None are applicable.
PO 7.6 Vehicle parking areas and associated driveways are landscaped to provide shade and positively contribute to amenity.	DTS/DPF 7.6 None are applicable.
PO 7.7 Vehicle parking areas and access ways incorporate integrated stormwater management techniques such as permeable or porous surfaces, infiltration systems, drainage swales or rain gardens that	DTS/DPF 7.7 None are applicable.

Policy24	P&D Code (in effect) - Version 2023.13 - 31/08/2023
integrate with soft landscaping.	
Earthworks and sloping land	
PO 8.1 Development, including any associated driveways and access tracks, minimises the need for earthworks to limit disturbance to natural topography.	**DTS/DPF 8.1** Development does not involve any of the following: (a) excavation exceeding a vertical height of 1m (b) filling exceeding a vertical height of 1m (c) a total combined excavation and filling vertical height of 2m or more.
PO 8.2 Driveways and access tracks are designed and constructed to allow safe and convenient access on sloping land (with a gradient exceeding 1 in 8).	**DTS/DPF 8.2** Driveways and access tracks on sloping land (with a gradient exceeding 1 in 8) satisfy (a) and (b): (a) do not have a gradient exceeding 25% (1-in-4) at any point along the driveway (b) are constructed with an all-weather trafficable surface.
PO 8.3 Driveways and access tracks on sloping land (with a gradient exceeding 1 in 8): (a) do not contribute to the instability of embankments and cuttings (b) provide level transition areas for the safe movement of people and goods to and from the development (c) are designed to integrate with the natural topography of the land.	**DTS/DPF 8.3** None are applicable.
PO 8.4 Development on sloping land (with a gradient exceeding 1 in 8) avoids the alteration of natural drainage lines and includes on-site drainage systems to minimise erosion.	**DTS/DPF 8.4** None are applicable.
PO 8.5 Development does not occur on land at risk of landslip nor increases the potential for landslip or land surface instability.	**DTS/DPF 8.5** None are applicable.
Fences and Walls	
PO 9.1 Fences, walls and retaining walls are of sufficient height to maintain privacy and security without unreasonably impacting the visual amenity and adjoining land's access to sunlight or the amenity of public places.	**DTS/DPF 9.1** None are applicable.
PO 9.2 Landscaping incorporated on the low side of retaining walls is visible from public roads and public open space to minimise visual impacts.	**DTS/DPF 9.2** A vegetated landscaped strip 1m wide or more is provided against the low side of a retaining wall.
Overlooking / Visual Privacy (in building 2 storeys or less)	
PO 10.1 Development mitigates direct overlooking from upper level windows to habitable rooms and private open spaces of adjoining residential uses.	**DTS/DPF 10.1** Upper level windows facing side or rear boundaries shared with a residential allotment/site satisfy one of the following: (a) are permanently obscured to a height of 1.5m above finished floor level and are fixed or not capable of being opened more than 200mm (b) have sill heights greater than or equal to 1.5m above finished floor level (c) **incorporate screening with a maximum of 25% openings, permanently fixed no more than 500mm from the window surface and sited adjacent to any part of the window less than 1.5 m above the finished floor level.**
PO 10.2 Development mitigates direct overlooking from balconies, terraces and decks to habitable rooms and private open space of adjoining residential uses.	**DTS/DPF 10.2** One of the following is satisfied: (a) the longest side of the balcony or terrace will face a public road, public road reserve or public reserve that is at least 15m wide in all places faced by the balcony or terrace or (b) all sides of balconies or terraces on upper building levels are permanently obscured by screening with a maximum 25% transparency/openings fixed to a minimum height of: (i) 1.5m above finished floor level where the balcony is located at least 15 metres from the nearest habitable window of a dwelling on adjacent land or (ii) 1.7m above finished floor level in all other cases
All Residential development	
Front elevations and passive surveillance	

PO 11.1 Dwellings incorporate windows along primary street frontages to encourage passive surveillance and make a positive contribution to the streetscape.	**DTS/DPF 11.1** Each dwelling with a frontage to a public street: (a) includes at least one window facing the primary street from a habitable room that has a minimum internal room dimension of 2.4m (b) has an aggregate window area of at least $2m^2$ facing the primary street.
PO 11.2 Dwellings incorporate entry doors within street frontages to address the street and provide a legible entry point for visitors.	**DTS/DPF 11.2** Dwellings with a frontage to a public street have an entry door visible from the primary street boundary.
Outlook and amenity	
PO 12.1 Living rooms have an external outlook to provide a high standard of amenity for occupants.	**DTS/DPF 12.1** A living room of a dwelling incorporates a window with an outlook towards the street frontage or private open space, public open space, or waterfront areas.
PO 12.2 Bedrooms are separated or shielded from active communal recreation areas, common access areas and vehicle parking areas and access ways to mitigate noise and artificial light intrusion.	**DTS/DPF 12.2** None are applicable.
Ancillary Development	
PO 13.1 Residential ancillary buildings and structures are sited and designed to not detract from the streetscape or appearance of buildings on the site or neighbouring properties.	**DTS/DPF 13.1** Ancillary buildings: (a) are ancillary to a dwelling erected on the same site (b) have a floor area not exceeding 60m2 (c) are not constructed, added to or altered so that any part is situated: (i) in front of any part of the building line of the dwelling to which it is ancillary or (ii) within 900mm of a boundary of the allotment with a secondary street (if the land has boundaries on two or more roads) (d) in the case of a garage or carport, the garage or carport: (i) is set back at least 5.5m from the boundary of the primary street (ii) when facing a primary street or secondary street, has a total door / opening not exceeding: A. for dwellings of single building level - 7m in width or 50% of the site frontage, whichever is the lesser B. for dwellings comprising two or more building levels at the building line fronting the same public street - 7m in width (e) if situated on a boundary (not being a boundary with a primary street or secondary street), do not exceed a length of 11.5m unless: (i) a longer wall or structure exists on the adjacent site and is situated on the same allotment boundary and (ii) the proposed wall or structure will be built along the same length of boundary as the existing adjacent wall or structure to the same or lesser extent (f) if situated on a boundary of the allotment (not being a boundary with a primary street or secondary street), all walls or structures on the boundary will not exceed 45% of the length of that boundary (g) will not be located within 3m of any other wall along the same boundary unless on an adjacent site on that boundary there is an existing wall of a building that would be adjacent to or about the proposed wall or structure (h) have a wall height or post height not exceeding 3m above natural ground level (and not including a gable end) (i) have a roof height where no part of the roof is more than 5m above the natural ground level (j) if clad in sheet metal, is pre-colour treated or painted in a non-reflective colour (k) retains a total area of soft landscaping in accordance with (i) or (ii), whichever is less: (i) a total area as determined by the following table:

Dwelling site area (or in the case of residential flat building or group dwelling(s), average site area) (m^2)	Minimum percentage of site
<150	10%
150-200	15%
201-450	20%
>450	25%

(ii) the amount of existing soft landscaping prior to the development occurring.

PO 13.2 Ancillary buildings and structures do not impede on-site functional requirements such as private open space provision or car parking requirements and do not result in over-development of the site.	**DTS/DPF 13.2** Ancillary buildings and structures do not result in: (a) less private open space than specified in Design in Urban Areas Table 1 - Private Open Space (b) less on-site car parking than specified in Transport, Access and Parking Table 1 - General Off-Street Car Parking Requirements or Table 2 - Off-Street Car Parking Requirements in Designated Areas.
PO 13.3 Fixed plant and equipment in the form of pumps and/or filtration systems for a swimming pool or spa is positioned and/or housed to not cause unreasonable noise nuisance to adjacent sensitive receivers.	**DTS/DPF 13.3** The pump and/or filtration system is ancillary to a dwelling erected on the same site and is: (a) enclosed in a solid acoustic structure that is located at least 5m from the nearest habitable room located on an adjoining allotment or (b) located at least 12m from the nearest habitable room located on an adjoining allotment.
PO 13.4 Buildings and structures that are ancillary to an existing non-residential use do not detract from the streetscape character, appearance of buildings on the site of the development, or the amenity of neighbouring properties.	**DTS/DPF 13.4** Non-residential ancillary buildings and structures: (a) are ancillary and subordinate to an existing non-residential use on the same site (b) have a floor area not exceeding the following: Allotment size: ≤500m² — Floor area: 60m² >500m² — 80m² (c) are not constructed, added to or altered so that any part is situated: (i) in front of any part of the building line of the main building to which it is ancillary or (ii) within 900mm of a boundary of the allotment with a secondary street (if the land has boundaries on two or more roads) (d) in the case of a garage or carport, the garage or carport: (i) is set back at least 5.5m from the boundary of the primary street (e) if situated on a boundary (not being a boundary with a primary street or secondary street), do not exceed a length of 11.5m unless: (i) a longer wall or structure exists on the adjacent site and is situated on the same allotment boundary (ii) the proposed wall or structure will be built along the same length of boundary as the existing adjacent wall or structure to the same or lesser extent (f) if situated on a boundary of the allotment (not being a boundary with a primary street or secondary street), all walls or structures on the boundary will not exceed 45% of the length of that boundary (g) will not be located within 3m of any other wall along the same boundary unless on an adjacent site on that boundary there is an existing wall of a building that would be adjacent to or about the proposed wall or structure (h) have a wall height (or post height) not exceeding 3m (and not including a gable end) (i) have a roof height where no part of the roof is more than 5m above the natural ground level (j) if clad in sheet metal, is pre-colour treated or painted in a non-reflective colour.
Garage appearance	
PO 14.1 Garaging is designed to not detract from the streetscape or appearance of a dwelling.	**DTS/DPF 14.1** Garages and carports facing a street: (a) are situated so that no part of the garage or carport is in front of any part of the building line of the dwelling (b) are set back at least 5.5m from the boundary of the primary street (c) have a garage door / opening not exceeding 7m in width (d) have a garage door /opening width not exceeding 50% of the site frontage unless the dwelling has two or more building levels at the building line fronting the same public street.
Massing	
PO 15.1 The visual mass of larger buildings is reduced when viewed from adjoining allotments or public streets.	**DTS/DPF 15.1** None are applicable
Dwelling additions	
PO 16.1 Dwelling additions are sited and designed to not detract from the streetscape or amenity of adjoining properties and do not impede on-site functional requirements.	**DTS / DPF 16.1** Dwelling additions: (a) are not constructed, added to or altered so that any part is situated closer to a public street (b) do not result in: (i) excavation exceeding a vertical height of 1m (ii) filling exceeding a vertical height of 1m (iii) a total combined excavation and filling vertical height of 2m or more (iv) less Private Open Space than specified in Design Table 1 - Private Open Space (v) less on-site parking than specified in Transport Access and Parking Table 1 - General Off-Street Car Parking Requirements or Table 2 - Off-Street Car Parking Requirements in Designated Areas (vi) upper level windows facing side or rear boundaries unless: A. they are permanently obscured to a height of 1.5m above finished floor level that is fixed or not capable of being opened more than 200mm or B. have sill heights greater than or equal to 1.5m above finished floor level or C. incorporate screening to a height of 1.5m above finished floor level (vii) all sides of balconies or terraces on upper building levels are permanently obscured by screening with a maximum 25% transparency/openings fixed to a minimum height of:

	A. 1.5m above finished floor level where the balcony is located at least 15 metres from the nearest habitable window of a dwelling on adjacent land B. 1.7m above finished floor level in all other cases.
Private Open Space	
PO 17.1 Dwellings are provided with suitable sized areas of usable private open space to meet the needs of occupants.	DTS/DPF 17.1 Private open space is provided in accordance with Design Table 1 - Private Open Space.
Water Sensitive Design	
PO 18.1 Residential development creating a common driveway / access includes stormwater management systems that minimise the discharge of sediment, suspended solids, organic matter, nutrients, bacteria, litter and other contaminants to the stormwater system, watercourses or other water bodies.	DTS/DPF 18.1 Residential development creating a common driveway / access that services 5 or more dwellings achieves the following stormwater runoff outcomes: (a) 80 per cent reduction in average annual total suspended solids (b) 60 per cent reduction in average annual total phosphorus (c) 45 per cent reduction in average annual total nitrogen.
PO 18.2 Residential development creating a common driveway / access includes a stormwater management system designed to mitigate peak flows and manage the rate and duration of stormwater discharges from the site to ensure that the development does not increase the peak flows in downstream systems.	DTS/DPF 18.2 Development creating a common driveway / access that services 5 or more dwellings: (a) maintains the pre-development peak flow rate from the site based upon a 0.35 runoff coefficient for the 18.1% AEP 30-minute storm and the stormwater runoff time to peak is not increased or captures and retains the difference in pre-development runoff volume (based upon a 0.35 runoff coefficient) vs post development runoff volume from the site for an 18.1% AEP 30-minute storm; and (b) manages site generated stormwater runoff up to and including the 1% AEP flood event to avoid flooding of buildings.
Car parking, access and manoeuvrability	
PO 19.1 Enclosed parking spaces are of a size and dimensions to be functional, accessible and convenient.	DTS/DPF 19.1 Residential car parking spaces enclosed by fencing, walls or other structures have the following internal dimensions (separate from any waste storage area): (a) single width car parking spaces: (i) a minimum length of 5.4m per space (ii) a minimum width of 3.0m (iii) a minimum garage door width of 2.4m (b) double width car parking spaces (side by side): (i) a minimum length of 5.4m (ii) a minimum width of 5.4m (iii) minimum garage door width of 2.4m per space.
PO 19.2 Uncovered parking spaces are of a size and dimensions to be functional, accessible and convenient.	DTS/DPF 19.2 Uncovered car parking spaces have: (a) a minimum length of 5.4m (b) a minimum width of 2.4m (c) a minimum width between the centre line of the space and any fence, wall or other obstruction of 1.5m
PO 19.3 Driveways and access points are located and designed to facilitate safe access and egress while maximising land available for street tree planting, pedestrian movement, domestic waste collection, landscaped street frontages and on-street parking.	DTS/DPF 19.3 Driveways and access points on sites with a frontage to a public road of 10m or less have a width between 3.0 and 3.2 metres measured at the property boundary and are the only access point provided on the site.
PO 19.4 Vehicle access is safe, convenient, minimises interruption to the operation of public roads and does not interfere with street infrastructure or street trees.	DTS/DPF 19.4 Vehicle access to designated car parking spaces satisfy (a) or (b): (a) is provided via a lawfully existing or authorised access point or an access point for which consent has been granted as part of an application for the division of land (b) where newly proposed: (i) is set back 6m or more from the tangent point of an intersection of 2 or more roads (ii) is set back outside of the marked lines or infrastructure dedicating a pedestrian crossing (iii) does not involve the removal, relocation or damage to of mature street trees, street furniture or utility infrastructure services.
PO 19.5 Driveways are designed to enable safe and convenient vehicle movements from the public road to on-site parking spaces.	DTS/DPF 19.5 Driveways are designed and sited so that: (a) the gradient of the driveway does not exceed a grade of 1 in 4 and includes transitions to ensure a maximum grade change of 12.5% (1 in 8) for summit changes, and 15% (1 in 6.7) for sag changes, in accordance with AS 2890.1:2004 to prevent vehicles bottoming or scraping

(b) the centreline of the driveway has an angle of no less than 70 degrees and no more than 110 degrees from the street boundary to which it takes its access as shown in the following diagram:

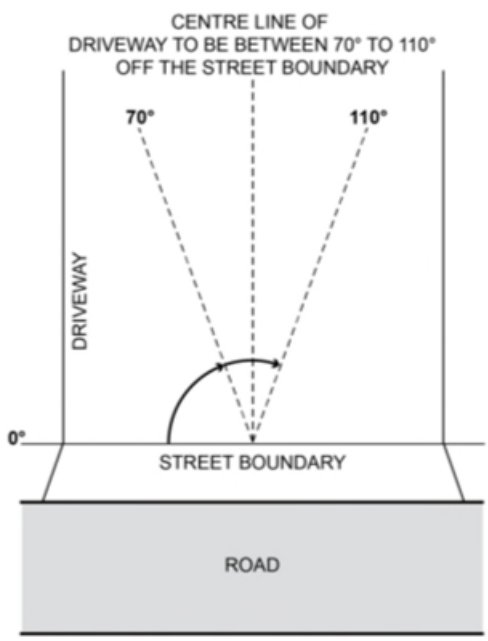

(c) if located to provide access from an alley, lane or right of way - the alley, land or right or way is at least 6.2m wide along the boundary of the allotment / site

PO 19.6 Driveways and access points are designed and distributed to optimise the provision of on-street visitor parking.	**DTS/DPF 19.6** Where on-street parking is available abutting the site's street frontage, on-street parking is retained in accordance with the following requirements: (a) minimum 0.33 on-street spaces per dwelling on the site (rounded up to the nearest whole number) (b) minimum car park length of 5.4m where a vehicle can enter or exit a space directly (c) minimum carpark length of 6m for an intermediate space located between two other parking spaces or to an end obstruction where the parking is indented.
Waste storage	
PO 20.1 Provision is made for the adequate and convenient storage of waste bins in a location screened from public view.	**DTS/DPF 20.1** None are applicable.
Design of Transportable Dwellings	
PO 21.1 The sub-floor space beneath transportable buildings is enclosed to give the appearance of a permanent structure.	**DTS/DPF 21.1** Buildings satisfy (a) or (b): (a) are not transportable or (b) the sub-floor space between the building and ground level is clad in a material and finish consistent with the building.
Group dwelling, residential flat buildings and battle-axe development	
Amenity	
PO 22.1 Dwellings are of a suitable size to accommodate a layout that is well organised and provides a high standard of amenity for occupants.	**DTS/DPF 22.1** Dwellings have a minimum internal floor area in accordance with the following table:

Number of bedrooms	Minimum internal floor area
Studio	35m^2

	1 bedroom: $50m^2$ 2 bedroom: $65m^2$ 3+ bedrooms: $80m^2$ and any dwelling over 3 bedrooms provides an additional $15m^2$ for every additional bedroom
PO 22.2 The orientation and siting of buildings minimises impacts on the amenity, outlook and privacy of occupants and neighbours.	**DTS/DPF 22.2** None are applicable.
PO 22.3 Development maximises the number of dwellings that face public open space and public streets and limits dwellings oriented towards adjoining properties.	**DTS/DPF 22.3** None are applicable.
PO 22.4 Battle-axe development is appropriately sited and designed to respond to the existing neighbourhood context.	**DTS/DPF 22.4** Dwelling sites/allotments are not in the form of a battle-axe arrangement.
Communal Open Space	
PO 23.1 Private open space provision may be substituted for communal open space which is designed and sited to meet the recreation and amenity needs of residents.	**DTS/DPF 23.1** None are applicable.
PO 23.2 Communal open space is of sufficient size and dimensions to cater for group recreation.	**DTS/DPF 23.2** Communal open space incorporates a minimum dimension of 5 metres.
PO 23.3 Communal open space is designed and sited to: (a) be conveniently accessed by the dwellings which it services (b) have regard to acoustic, safety, security and wind effects.	**DTS/DPF 23.3** None are applicable.
PO 23.4 Communal open space contains landscaping and facilities that are functional, attractive and encourage recreational use.	**DTS/DPF 23.4** None are applicable.
PO 23.5 Communal open space is designed and sited to: (a) in relation to rooftop or elevated gardens, minimise overlooking into habitable room windows or onto the useable private open space of other dwellings (b) in relation to ground floor communal space, be overlooked by habitable rooms to facilitate passive surveillance.	**DTS/DPF 23.5** None are applicable.
Carparking, access and manoeuvrability	
PO 24.1 Driveways and access points are designed and distributed to optimise the provision of on-street visitor parking.	**DTS/DPF 24.1** Where on-street parking is available directly adjacent the site, on-street parking is retained adjacent the subject site in accordance with the following requirements: (a) minimum 0.33 on-street car parks per proposed dwellings (rounded up to the nearest whole number) (b) minimum car park length of 5.4m where a vehicle can enter or exit a space directly (c) minimum carpark length of 6m for an intermediate space located between two other parking spaces or to an end obstruction where the parking is indented.
PO 24.2 The number of vehicular access points onto public roads is minimised to reduce interruption of the footpath and positively contribute to public safety and walkability.	**DTS/DPF 24.2** Access to group dwellings or dwellings within a residential flat building is provided via a single common driveway.
PO 24.3 Residential driveways that service more than one dwelling are designed to allow safe and convenient movement.	**DTS/DPF 24.3** Driveways that service more than 1 dwelling or a dwelling on a battle-axe site: (a) have a minimum width of 3m (b) for driveways servicing more than 3 dwellings: (i) have a width of 5.5m or more and a length of 6m or more at the kerb of the primary street

	(ii) where the driveway length exceeds 30m, incorporate a passing point at least every 30 metres with a minimum width of 5.5m and a minimum length of 6m.
PO 24.4 Residential driveways in a battle-axe configuration are designed to allow safe and convenient movement.	**DTS/DPF 24.4** Where in a battle-axe configuration, a driveway servicing one dwelling has a minimum width of 3m.
PO 24.5 Residential driveways that service more than one dwelling are designed to allow passenger vehicles to enter and exit the site and manoeuvre within the site in a safe and convenient manner.	**DTS/DPF 24.5** Driveways providing access to more than one dwelling, or a dwelling on a battle-axe site, allow a B85 passenger vehicle to enter and exit the garages or parking spaces in no more than a three-point turn manoeuvre.
PO 24.6 Dwellings are adequately separated from common driveways and manoeuvring areas.	**DTS/DPF 24.6** Dwelling walls with entry doors or ground level habitable room windows are set back at least 1.5m from any driveway or area designated for the movement and manoeuvring of vehicles.
Soft Landscaping	
PO 25.1 Soft landscaping is provided between dwellings and common driveways to improve the outlook for occupants and appearance of common areas.	**DTS/DPF 25.1** Other than where located directly in front of a garage or a building entry, soft landscaping with a minimum dimension of 1m is provided between a dwelling and common driveway.
PO 25.2 Soft landscaping is provided that improves the appearance of common driveways.	**DTS/DPF 25.2** Where a common driveway is located directly adjacent the side or rear boundary of the site, soft landscaping with a minimum dimension of 1m is provided between the driveway and site boundary (excluding along the perimeter of a passing point).
Site Facilities / Waste Storage	
PO 26.1 Provision is made for suitable mailbox facilities close to the major pedestrian entry to the site or conveniently located considering the nature of accommodation and mobility of occupants.	**DTS/DPF 26.1** None are applicable.
PO 26.2 Provision is made for suitable external clothes drying facilities.	**DTS/DPF 26.2** None are applicable.
PO 26.3 Provision is made for suitable household waste and recyclable material storage facilities which are: (a) located away, or screened, from public view, and (b) conveniently located in proximity to dwellings and the waste collection point.	**DTS/DPF 26.3** None are applicable.
PO 26.4 Waste and recyclable material storage areas are located away from dwellings.	**DTS/DPF 26.4** Dedicated waste and recyclable material storage areas are located at least 3m from any habitable room window.
PO 26.5 Where waste bins cannot be conveniently collected from the street, provision is made for on-site waste collection, designed to accommodate the safe and convenient access, egress and movement of waste collection vehicles.	**DTS/DPF 26.5** None are applicable.
PO 26.6 Services including gas and water meters are conveniently located and screened from public view.	**DTS/DPF 26.6** None are applicable.
Supported accommodation and retirement facilities	
Siting and Configuration	
PO 27.1 Supported accommodation and housing for aged persons and people with disabilities is located where on-site movement of residents is not unduly restricted by the slope of the land.	**DTS/DPF 27.1** None are applicable.
Movement and Access	
PO 28.1	**DTS/DPF 28.1**

Policy24	P&D Code (in effect) - Version 2023.13 - 31/08/2023
Development is designed to support safe and convenient access and movement for residents by providing: (a) ground-level access or lifted access to all units (b) level entry porches, ramps, paths, driveways, passenger loading areas and areas adjacent to footpaths that allow for the passing of wheelchairs and resting places (c) car parks with gradients no steeper than 1-in-40 and of sufficient area to provide for wheelchair manoeuvrability (d) kerb ramps at pedestrian crossing points.	None are applicable.
Communal Open Space	
PO 29.1 Development is designed to provide attractive, convenient and comfortable indoor and outdoor communal areas to be used by residents and visitors.	DTS/DPF 29.1 None are applicable.
PO 29.2 Private open space provision may be substituted for communal open space which is designed and sited to meet the recreation and amenity needs of residents.	DTS/DPF 29.2 None are applicable.
PO 29.3 Communal open space is of sufficient size and dimensions to cater for group recreation.	DTS/DPF 29.3 Communal open space incorporates a minimum dimension of 5 metres.
PO 29.4 Communal open space is designed and sited to: (a) be conveniently accessed by the dwellings which it services (b) have regard to acoustic, safety, security and wind effects.	DTS/DPF 29.4 None are applicable.
PO 29.5 Communal open space contains landscaping and facilities that are functional, attractive and encourage recreational use.	DTS/DPF 29.5 None are applicable.
PO 29.6 Communal open space is designed and sited to: (a) in relation to rooftop or elevated gardens, minimise overlooking into habitable room windows or onto the useable private open space of other dwellings (b) in relation to ground floor communal space, be overlooked by habitable rooms to facilitate passive surveillance.	DTS/DPF 29.6 None are applicable.
Site Facilities / Waste Storage	
PO 30.1 Development is designed to provide storage areas for personal items and specialised equipment such as small electric powered vehicles, including facilities for the recharging of small electric powered vehicles.	DTS/DPF 30.1 None are applicable.
PO 30.2 Provision is made for suitable mailbox facilities close to the major pedestrian entry to the site or conveniently located considering the nature of accommodation and mobility of occupants.	DTS/DPF 30.2 None are applicable.
PO 30.3 Provision is made for suitable external clothes drying facilities.	DTS/DPF 30.3 None are applicable.
PO 30.4 Provision is made for suitable household waste and recyclable material storage facilities conveniently located and screened from public view.	DTS/DPF 30.4 None are applicable.
PO 30.5 Waste and recyclable material storage areas are located away from dwellings.	DTS/DPF 30.5 Dedicated waste and recyclable material storage areas are located at least 3m from any habitable room window.
PO 30.6 Provision is made for on-site waste collection where 10 or more bins are to be collected at any one time.	DTS/DPF 30.6 None are applicable.

PO 30.7 Services including gas and water meters are conveniently located and screened from public view.	DTS/DPF 30.7 None are applicable.
All non-residential development	
Water Sensitive Design	
PO 31.1 Development likely to result in significant risk of export of litter, oil or grease includes stormwater management systems designed to minimise pollutants entering stormwater.	DTS/DPF 31.1 None are applicable.
PO 31.2 Water discharged from a development site is of a physical, chemical and biological condition equivalent to or better than its pre-developed state.	DTS/DPF 31.2 None are applicable.
Wash-down and Waste Loading and Unloading	
PO 32.1 Areas for activities including loading and unloading, storage of waste refuse bins in commercial and industrial development or wash-down areas used for the cleaning of vehicles, vessels, plant or equipment are: (a) designed to contain all wastewater likely to pollute stormwater within a bunded and roofed area to exclude the entry of external surface stormwater run-off (b) paved with an impervious material to facilitate wastewater collection (c) of sufficient size to prevent 'splash-out' or 'over-spray' of wastewater from the wash-down area (d) designed to drain wastewater to either: (i) a treatment device such as a sediment trap and coalescing plate oil separator with subsequent disposal to a sewer, private or Community Wastewater Management Scheme or (ii) a holding tank and its subsequent removal off-site on a regular basis.	DTS/DPF 32.1 None are applicable.
Decks	
Design and Siting	
PO 33.1 Decks are designed and sited to: (a) complement the associated building form (b) minimise impacts on the streetscape through siting behind the building line of the principal building (unless on a significant allotment or open space) (c) minimise cut and fill and overall massing when viewed from adjacent land.	DTS/DPF 33.1 Decks: (a) where ancillary to a dwelling: (i) are not constructed, added to or altered so that any part is situated: A. in front of any part of the building line of the dwelling to which it is ancillary or B. within 900mm of a boundary of the allotment with a secondary street (if the land has boundaries on two or more roads) (ii) are set back at least 900mm from side or rear allotment boundaries (iii) when attached to the dwelling, has a finished floor level consistent with the finished ground floor level of the dwelling (iv) where associated with a residential use, retains a total area of soft landscaping for the entire development site, including any common property, with a minimum dimension of 700mm in accordance with (A) or (B), whichever is less: A. a total area is determined by the following table:

Site area (or in the case of residential flat building or group dwelling(s), average site area) (m^2)	Minimum percentage of site
<150	10%
150-200	15%
>200-450	20%
>450	25%

B. the amount of existing soft landscaping prior to the development occurring.

(b) where in association with a non-residential use:
(i) are set back at least 2 metres from the boundary of an allotment used for residential purposes.

	(ii) are set back at least 2 metres from a public road. (iii) have a floor area not exceeding 25m^2 (c) in all cases, has a finished floor level not exceeding 1 metre above natural ground level at any point.
PO 33.2 Decks are designed and sited to minimise direct overlooking of habitable rooms and private open spaces of adjoining residential uses in neighbourhood-type zones through suitable floor levels, screening and siting taking into account the slope of the subject land, existing vegetation on the subject land, and fencing.	DTS/DPF 33.2 Decks with a finished floor level/s 500mm or more above natural ground level facing side or rear boundaries shared with a residential use in a neighbourhood-type zone incorporate screening with a maximum of 25% transparency/openings, permanently fixed to the outer edge of the deck not less than 1.5 m above the finished floor level/s.
PO 33.3 Decks used for outdoor dining, entertainment or other commercial uses provide carparking in accordance with the primary use of the deck.	DTS/DPF 33.3 Decks used for commercial purposes do not result in less on-site car parking for the primary use of the subject land than specified in Transport, Access and Parking Table 1 - General Off-Street Car Parking Requirements or Table 2 - Off-Street Car Parking Requirements in Designated Areas.

Table 1 - Private Open Space

Dwelling Type	Minimum Rate
Dwelling (at ground level)	Total private open space area: (a) Site area <301m^2: 24m^2 located behind the building line. (b) Site area ≥ 301m^2: 60m^2 located behind the building line. Minimum directly accessible from a living room: 16m^2 / with a minimum dimension 3m.
Dwelling (above ground level)	Studio (no separate bedroom): 4m^2 with a minimum dimension 1.8m One bedroom: 8m^2 with a minimum dimension 2.1m Two bedroom dwelling: 11m^2 with a minimum dimension 2.4m Three + bedroom dwelling: 15m^2 with a minimum dimension 2.6m
Cabin or caravan (permanently fixed to the ground) in a residential park or a caravan and tourist park	Total area: 16m^2, which may be used as second car parking space, provided on each site intended for residential occupation.

Design in Urban Areas

Assessment Provisions (AP)

Desired Outcome (DO)

Desired Outcome	
DO 1	Development is: (a) contextual - by considering, recognising and carefully responding to its natural surroundings or built environment and positively contributing to the character of the locality (b) durable - fit for purpose, adaptable and long lasting (c) inclusive - by integrating landscape design to optimise pedestrian and cyclist usability, privacy and equitable access and promoting the provision of quality spaces integrated with the public realm that can be used for access and recreation and help optimise security and safety both internally and within the public realm, for occupants and visitors (d) sustainable - by integrating sustainable techniques into the design and siting of development and landscaping to improve community health, urban heat, water management, environmental performance, biodiversity and local amenity and to minimise energy consumption.

Performance Outcomes (PO) and Deemed-to-Satisfy (DTS) Criteria / Designated Performance Feature (DPF)

Performance Outcome	Deemed-to-Satisfy Criteria / Designated Performance Feature
All Development	
External Appearance	
PO 1.1 Buildings reinforce corners through changes in setback, articulation, materials, colour and massing (including height, width, bulk, roof form and slope).	DTS/DPF 1.1 None are applicable.

PO 1.2 Where zero or minor setbacks are desirable, development provides shelter over footpaths (in the form of verandahs, awnings, canopies and the like, with adequate lighting) to positively contribute to the walkability, comfort and safety of the public realm.	DTS/DPF 1.2 None are applicable.
PO 1.3 Building elevations facing the primary street (other than ancillary buildings) are designed and detailed to convey purpose, identify main access points and complement the streetscape.	DTS/DPF 1.3 None are applicable.
PO 1.4 Plant, exhaust and intake vents and other technical equipment are integrated into the building design to minimise visibility from the public realm and negative impacts on residential amenity by: (a) positioning plant and equipment discretely, in unobtrusive locations as viewed from public roads and spaces (b) screening rooftop plant and equipment from view (c) when located on the roof of non-residential development, locating the plant and equipment as far as practicable from adjacent sensitive land uses.	DTS/DPF 1.4 Development does not incorporate any structures that protrude beyond the roofline.
PO 1.5 The negative visual impact of outdoor storage, waste management, loading and service areas is minimised by integrating them into the building design and screening them from public view (such as fencing, landscaping and built form), taking into account the form of development contemplated in the relevant zone.	DTS/DPF 1.5 None are applicable.
Safety	
PO 2.1 Development maximises opportunities for passive surveillance of the public realm by providing clear lines of sight, appropriate lighting and the use of visually permeable screening wherever practicable.	DTS/DPF 2.1 None are applicable.
PO 2.2 Development is designed to differentiate public, communal and private areas.	DTS/DPF 2.2 None are applicable.
PO 2.3 Buildings are designed with safe, perceptible and direct access from public street frontages and vehicle parking areas.	DTS/DPF 2.3 None are applicable.
PO 2.4 Development at street level is designed to maximise opportunities for passive surveillance of the adjacent public realm.	DTS/DPF 2.4 None are applicable.
PO 2.5 Common areas and entry points of buildings (such as the foyer areas of residential buildings) and non-residential land uses at street level, maximise passive surveillance from the public realm to the inside of the building at night.	DTS/DPF 2.5 None are applicable.
Landscaping	
PO 3.1 Soft landscaping and tree planting are incorporated to: (a) minimise heat absorption and reflection (b) maximise shade and shelter (c) maximise stormwater infiltration (d) enhance the appearance of land and streetscapes.	DTS/DPF 3.1 None are applicable.
Environmental Performance	
PO 4.1 Buildings are sited, oriented and designed to maximise natural sunlight access and ventilation to main activity areas, habitable rooms, common areas and open spaces.	DTS/DPF 4.1 None are applicable.
PO 4.2 Buildings are sited and designed to maximise passive environmental performance and minimise energy consumption and reliance on mechanical systems, such as heating and cooling.	DTS/DPF 4.2 None are applicable.

PO 4.3 Buildings incorporate climate responsive techniques and features such as building and window orientation, use of eaves, verandahs and shading structures, water harvesting, at ground landscaping, green walls, green roofs and photovoltaic cells.	DTS/DPF 4.3 None are applicable.
Water Sensitive Design	
PO 5.1 Development is sited and designed to maintain natural hydrological systems without negatively impacting: (a) the quantity and quality of surface water and groundwater (b) the depth and directional flow of surface water and groundwater (c) the quality and function of natural springs.	DTS/DPF 5.1 None are applicable.
On-site Waste Treatment Systems	
PO 6.1 Dedicated on-site effluent disposal areas do not include any areas to be used for, or could be reasonably foreseen to be used for, private open space, driveways or car parking.	DTS/DPF 6.1 Effluent disposal drainage areas do not: (a) encroach within an area used as private open space or result in less private open space than that specified in Design in Urban Areas Table 1 - Private Open Space (b) use an area also used as a driveway (c) encroach within an area used for on-site car parking or result in less on-site car parking than that specified in Transport, Access and Parking Table 1 - General Off-Street Car Parking Requirements or Table 2 - Off-Street Car Parking Requirements in Designated Areas.
On-parking appearance	
PO 7.1 Development facing the street is designed to minimise the negative impacts of any semi-basement and undercroft car parking on streetscapes through techniques such as: (a) limiting protrusion above finished ground level (b) screening through appropriate planting, fencing and mounding (c) limiting the width of openings and integrating them into the building structure.	DTS/DPF 7.1 None are applicable.
PO 7.2 Vehicle parking areas appropriately located, designed and constructed to minimise impacts on adjacent sensitive receivers through measures such as ensuring they are attractively developed and landscaped, screen fenced and the like.	DTS/DPF 7.2 None are applicable.
PO 7.3 Safe, legible, direct and accessible pedestrian connections are provided between parking areas and the development.	DTS/DPF 7.3 None are applicable.
PO 7.4 Street-level vehicle parking areas incorporate tree planting to provide shade, reduce solar heat absorption and reflection.	DTS/DPF 7.4 Vehicle parking areas that are open to the sky and comprise 10 or more car parking spaces include a shade tree with a mature canopy of 4m diameter spaced for each 10 car parking spaces provided and a landscaped strip on any road frontage of a minimum dimension of 1m.
PO 7.5 Street level parking areas incorporate soft landscaping to improve visual appearance when viewed from within the site and from public places.	DTS/DPF 7.5 Vehicle parking areas comprising 10 or more car parking spaces include soft landscaping with a minimum dimension of: (a) 1m along all public road frontages and allotment boundaries (b) 1m between double rows of car parking spaces.
PO 7.6 Vehicle parking areas and associated driveways are landscaped to provide shade and positively contribute to amenity.	DTS/DPF 7.6 None are applicable.
PO 7.7 Vehicle parking areas and access ways incorporate integrated stormwater management techniques such as permeable or porous surfaces, infiltration systems, drainage swales or rain gardens that integrate with soft landscaping.	DTS/DPF 7.7 None are applicable.
Earthworks and sloping land	
PO 8.1 Development, including any associated driveways and access tracks, minimises the need for earthworks to limit disturbance to natural topography.	DTS/DPF 8.1 Development does not involve any of the following: (a) excavation exceeding a vertical height of 1m

	(b) filling exceeding a vertical height of 1m (c) a total combined excavation and filling vertical height of 2m or more.
PO 8.2 Driveways and access tracks designed and constructed to allow safe and convenient access on sloping land.	DTS/DPF 8.2 Driveways and access tracks on sloping land (with a gradient exceeding 1 in 8) satisfy (a) and (b): (a) do not have a gradient exceeding 25% (1 in 4) at any point along the driveway (b) are constructed with an all-weather trafficable surface.
PO 8.3 Driveways and access tracks on sloping land (with a gradient exceeding 1 in 8): (a) do not contribute to the instability of embankments and cuttings (b) provide level transition areas for the safe movement of people and goods to and from the development (c) are designed to integrate with the natural topography of the land.	DTS/DPF 8.3 None are applicable.
PO 8.4 Development on sloping land (with a gradient exceeding 1 in 8) avoids the alteration of natural drainage lines and includes on site drainage systems to minimise erosion.	DTS/DPF 8.4 None are applicable.
PO 8.5 Development does not occur on land at risk of landslip or increase the potential for landslip or land surface instability.	DTS/DPF 8.5 None are applicable.
Fences and walls	
PO 9.1 Fences, walls and retaining walls of sufficient height maintain privacy and security without unreasonably impacting visual amenity and adjoining land's access to sunlight or the amenity of public places.	DTS/DPF 9.1 None are applicable.
PO 9.2 Landscaping is incorporated on the low side of retaining walls that are visible from public roads and public open space to minimise visual impacts.	DTS/DPF 9.2 A vegetated landscaped strip 1m wide or more is provided against the low side of a retaining wall.
Overlooking / Visual Privacy (low rise buildings)	
PO 10.1 Development mitigates direct overlooking from upper level windows to habitable rooms and private open spaces of adjoining residential uses in neighbourhood-type zones.	DTS/DPF 10.1 Upper level windows facing side or rear boundaries shared with a residential use in a neighbourhood-type zone: (a) are permanently obscured to a height of 1.5m above finished floor level and are fixed or not capable of being opened more than 125mm (b) have sill heights greater than or equal to 1.5m above finished floor level (c) incorporate screening with a maximum of 25% openings, permanently fixed no more than 500mm from the window surface and sited adjacent to any part of the window less than 1.5 m above the finished floor level.
PO 10.2 Development mitigates direct overlooking from balconies to habitable rooms and private open space of adjoining residential uses in neighbourhood type zones.	DTS/DPF 10.2 One of the following is satisfied: (a) the longest side of the balcony or terrace will face a public road, public road reserve or public reserve that is at least 15m wide in all places faced by the balcony or terrace or (b) all sides of balconies or terraces on upper building levels are permanently obscured by screening with a maximum 25% transparency/openings fixed to a minimum height of: (i) 1.5m above finished floor level where the balcony is located at least 15 metres from the nearest habitable window of a dwelling on adjacent land or (ii) 1.7m above finished floor level in all other cases
Site Facilities / Waste Storage (excluding low rise residential development)	
PO 11.1 Development provides a dedicated area for on-site collection and sorting of recyclable materials and refuse, green organic waste and wash bay facilities for the ongoing maintenance of bins that is adequate in size considering the number and nature of the activities they will serve and the frequency of collection.	DTS/DPF 11.1 None are applicable.
PO 11.2 Communal waste storage and collection areas are located, enclosed and designed to be screened from view from the public domain, open space and dwellings.	DTS/DPF 11.2 None are applicable.
PO 11.3 Communal waste storage and collection areas are designed to be well ventilated and located away from habitable rooms.	DTS/DPF 11.3 None are applicable.
PO 11.4 Communal waste storage and collection areas are designed to allow waste and recycling collection vehicles to enter and leave the site without reversing.	DTS/DPF 11.4 None are applicable.

PO 11.5 For mixed use developments, non-residential waste and recycling storage areas and access provide opportunities for on-site management of food waste through composting or other waste recovery as appropriate.	**DTS/DPF 11.5** None are applicable.
All Development – Medium and High Rise	
External Appearance	
PO 12.1 Buildings positively contribute to the character of the local area by responding to local context.	**DTS/DPF 12.1** None are applicable.
PO 12.2 Architectural detail at street level and a mixture of materials at lower building levels near the public interface are provided to reinforce a human scale.	**DTS/DPF 12.2** None are applicable.
PO 12.3 Buildings are designed to reduce visual mass by breaking up building elevations into distinct elements.	**DTS/DPF 12.3** None are applicable.
PO 12.4 Boundary walls visible from public land include visually interesting treatments to break up large blank elevations.	**DTS/DPF 12.4** None are applicable.
PO 12.5 External materials and finishes are durable and age well to minimise ongoing maintenance requirements.	**DTS/DPF 12.5** Buildings utilise a combination of the following external materials and finishes: (a) masonry (b) natural stone (c) pre-finished materials that minimise staining, discolouring or deterioration.
PO 12.6 Street-facing building elevations are designed to provide attractive, high quality and pedestrian-friendly street frontages.	**DTS/DPF 12.6** Building street frontages incorporate: (a) active uses such as shops or offices (b) prominent entry areas for multi-storey buildings (where it is a common entry) (c) habitable rooms of dwellings (d) areas of communal public realm with public art or the like, where consistent with the zone and/or subzone provisions.
PO 12.7 Entrances to multi-storey buildings are safe, attractive, welcoming, functional and contribute to streetscape character.	**DTS/DPF 12.7** Entrances to multi-storey buildings are: (a) oriented towards the street (b) clearly visible and easily identifiable from the street and vehicle parking areas (c) designed to be prominent, accentuated and a welcoming feature if there are no active or occupied ground floor uses (d) designed to provide shelter, a sense of personal address and transitional space around the entry (e) located as close as practicable to the lift and / or lobby access to minimise the need for long access corridors (f) designed to avoid the creation of potential areas of entrapment.
PO 12.8 Building services, plant and mechanical equipment are screened from the public realm.	**DTS/DPF 12.8** None are applicable.
Landscaping	
PO 13.1 Development facing a street provides a well landscaped area that contains a deep soil space to accommodate a tree of a species and size adequate to provide shade, contribute to tree canopy targets and soften the appearance of buildings.	**DTS/DPF 13.1** Buildings provide a 4m by 4m deep soil space in front of the building that accommodates a medium to large tree, except where no building setback from front property boundaries is desired.
PO 13.2 Deep soil zones are provided to retain existing vegetation or provide areas that can accommodate new deep root vegetation, including tall trees with large canopies to provide shade and soften the appearance of multi-storey buildings.	**DTS/DPF 13.2** Multi-storey development provides deep soil zones and incorporates trees at not less than the following rates, except in a location or zone where full site coverage is desired.

Site area	Minimum deep soil area	Minimum dimension	Tree / deep soil zones

<300 m^2	10 m^2	1.5m	1 small tree / 10 m^2
300-1500 m^2	7% site area	3m	1 medium tree / 30 m^2
>1500 m^2	7% site area	6m	1 large or medium tree / 60 m^2

Tree size and site area definitions

Small tree	4-6m mature height and 2-4m canopy spread
Medium tree	6-12m mature height and 4-8m canopy spread
Large tree	12m mature height and >8m canopy spread
Site area	The total area for development site, not average area per dwelling

PO 13.3 Deep soil zones with access to natural light are provided to assist in maintaining vegetation health.	**DTS/DPF 13.3** None are applicable.
PO 13.4 Unless separated by a public road or reserve, development sites adjacent to any zone that has a primary purpose of accommodating low-rise residential development incorporate a deep soil zone along the common boundary to enable medium to large trees to be retained or established to assist in screening new buildings of 3 or more building levels in height.	**DTS/DPF 13.4** Building elements of 3 or more building levels in height are set back at least 6m from a zone boundary in which a deep soil zone area is incorporated.

Environmental

PO 14.1 Development minimises detrimental micro-climatic impacts on adjacent land and buildings.	**DTS/DPF 14.1** None are applicable.
PO 14.2 Development incorporates sustainable design techniques and features such as window orientation, eaves and shading structures, water harvesting and use, green walls and roof designs that enable the provision of rain water tanks (where they are not provided elsewhere on site), green roofs and photovoltaic cells.	**DTS/DPF 14.2** None are applicable.
PO 14.3 Development of 5 or more building levels, or 21m or more in height (as measured from natural ground level and excluding roof-mounted mechanical plant and equipment) is designed to minimise the impacts of wind through measures such as: (a) a podium at the base of a tall tower and aligned with the street to deflect wind away from the street (b) substantial verandahs around a building to deflect downward travelling wind flows over pedestrian areas (c) the placement of buildings and use of setbacks to deflect the wind at ground level (d) avoiding tall shear elevations that create windy conditions at street level.	**DTS/DPF 14.3** None are applicable.

Car Parking

PO 15.1 Multi-level vehicle parking structures are designed to contribute to active street frontages and complement neighbouring buildings.	**DTS/DPF 15.1** Multi-level vehicle parking structures within buildings: (a) provide land uses such as commercial, retail or other non-car parking uses along ground floor street frontages (b) incorporate facade treatments in building elevations facing along major street frontages that are sufficiently enclosed and detailed to complement adjacent buildings.
PO 15.2 Multi-level vehicle parking structures within buildings complement the surrounding built form in terms of height, massing and scale.	**DTS/DPF 15.2** None are applicable.

Overlooking/Visual Privacy

PO 16.1 Development mitigates direct overlooking of habitable rooms and private open spaces of adjacent residential uses in neighbourhood-type zones through measures such as:	**DTS/DPF 16.1** None are applicable.

(a) appropriate site layout and building orientation
(b) off-setting the location of balconies and windows of habitable rooms or areas with those of other buildings so that views are oblique rather than direct to avoid direct line of sight
(c) building setbacks from boundaries (including building boundary to boundary where appropriate) that interrupt views or that provide a spatial separation between balconies or windows of habitable rooms
(d) screening devices that are integrated into the building design and have minimal negative effect on residents' or neighbours' amenity.

All residential development

Front elevations and passive surveillance

PO 17.1 Dwellings incorporate windows facing primary street frontages to encourage passive surveillance and make a positive contribution to the streetscape.	**DTS/DPF 17.1** Each dwelling with a frontage to a public street: (a) includes at least one window facing the primary street from a habitable room that has a minimum internal room dimension of 2.4m (b) has an aggregate window area of at least $2m^2$ facing the primary street.
PO 17.2 Dwellings incorporate entry doors within street frontages to address the street and provide a legible entry point for visitors.	**DTS/DPF 17.2** Dwellings with a frontage to a public street have an entry door visible from the primary street boundary.

Outlook and Amenity

PO 18.1 Living rooms have an external outlook to provide a high standard of amenity for occupants.	**DTS/DPF 18.1** A living room of a dwelling incorporates a window with an external outlook of the street frontage, private open space, public open space, or waterfront areas.
PO 18.2 Bedrooms are separated or shielded from active communal recreation areas, common access areas and vehicle parking areas and access ways to mitigate noise and artificial light intrusion.	**DTS/DPF 18.2** None are applicable.

Ancillary Development

PO 19.1

Residential ancillary buildings are sited and designed to not detract from the streetscape or appearance of primary residential buildings on the site or neighbouring properties.

DTS/DPF 19.1

Ancillary buildings:

(a) are ancillary to a dwelling erected on the same site
(b) have a floor area not exceeding 60m2
(c) are not constructed, added to or altered so that any part is situated:
  (i) in front of any part of the building line of the dwelling to which it is ancillary
  or
  (ii) within 900mm of a boundary of the allotment with a secondary street (if the land has boundaries on two or more roads)

(d) in the case of a garage or carport, the garage or carport:
  (i) is set back at least 5.5m from the boundary of the primary street
  (ii) when facing a primary street or secondary street, has a total door / opening not exceeding:
    A. for dwellings of single building level - 7m in width or 50% of the site frontage, whichever is the lesser
    B. for dwellings comprising two or more building levels at the building line fronting the same public street - 7m in width

(e) if situated on a boundary (not being a boundary with a primary street or secondary street), do not exceed a length of 11.5m unless:
  (i) a longer wall or structure exists on the adjacent site and is situated on the same allotment boundary
  and
  (ii) the proposed wall or structure will be built along the same length of boundary as the existing adjacent wall or structure to the same or lesser extent

(f) if situated on a boundary of the allotment (not being a boundary with a primary street or secondary street), all walls or structures on the boundary will not exceed 45% of the length of that boundary
(g) will not be located within 3m of any other wall along the same boundary unless on an adjacent site on that boundary there is an existing wall of a building that would be adjacent to or about the proposed wall or structure
(h) have a wall height or post height not exceeding 3m above natural ground level (and not including a gable end)
(i) have a roof height where no part of the roof is more than 5m above the natural ground level
(j) if clad in sheet metal, is pre-colour treated or painted in a non-reflective colour
(k) retains a total area of soft landscaping for the entire development site, including any common property, with a minimum dimension of 700mm in accordance with (i) or (ii), whichever is less:
  (i) a total area as determined by the following table:

Site area (or in the case of residential flat building or group dwelling(s), average site area) (m^2)	Minimum percentage of site
<150	10%

	150-200 | 15% >200-450 | 20% >450 | 25% (ii) the amount of existing soft landscaping prior to the development occurring.
PO 19.2 Ancillary buildings and structures do not impede on-site functional requirements such as private open space provision, car parking requirements or result in over-development of the site.	**DTS/DPF 19.2** Ancillary buildings and structures do not result in: (a) less private open space than specified in Design in Urban Areas Table 1 - Private Open Space (b) less on-site car parking than specified in Transport, Access and Parking Table 1 - General Off-Street Car Parking Requirements or Table 2 - Off-Street Car Parking Requirements in Designated Areas.
PO 19.3 Fixed plant and equipment in the form of pumps and/or filtration systems for a swimming pool or spa positioned and/or housed to not cause unreasonable noise nuisance to adjacent sensitive receivers.	**DTS/DPF 19.3** The pump and/or filtration system is ancillary to a dwelling erected on the same site and is: (a) enclosed in a solid acoustic structure that is located at least 5m from the nearest habitable room located on an adjoining allotment or (b) located at least 12m from the nearest habitable room located on an adjoining allotment.
PO 19.4 Buildings and structures that are ancillary to an existing non-residential use do not detract from the streetscape character, appearance of buildings on the site of the development, or the amenity of neighbouring properties.	**DTS/DPF 19.4** Non-residential ancillary buildings and structures: (a) are ancillary and subordinate to an existing non-residential use on the same site (b) have a floor area not exceeding the following: Allotment size | Floor area ≤500m² | 60m² >500m² | 80m² (c) are not constructed, added to or altered so that any part is situated: (i) in front of any part of the building line of the main building to which it is ancillary or (ii) within 900mm of a boundary of the allotment with a secondary street (if the land has boundaries on two or more roads) (d) in the case of a garage or carport, the garage or carport: (i) is set back at least 5.5m from the boundary of the primary street (e) if situated on a boundary (not being a boundary with a primary street or secondary street), do not exceed a length of 11.5m unless: (i) a longer wall or structure exists on the adjacent site and is situated on the same allotment boundary (ii) the proposed wall or structure will be built along the same length of boundary as the existing adjacent wall or structure to the same or lesser extent (f) if situated on a boundary of the allotment (not being a boundary with a primary street or secondary street), all walls or structures on the boundary will not exceed 45% of the length of that boundary (g) will not be located within 3m of any other wall along the same boundary unless on an adjacent site on that boundary there is an existing wall of a building that would be adjacent to or about the proposed wall or structure (h) have a wall height (or post height) not exceeding 3m (and not including a gable end) (i) have a roof height where no part of the roof is more than 5m above the natural ground level (j) if clad in sheet metal, is pre-colour treated or painted in a non-reflective colour.
Residential Development - Low Rise	
External appearance	
PO 20.1 Garaging is designed to not detract from the streetscape or appearance of a dwelling.	**DTS/DPF 20.1** Garages and carports facing a street: (a) are situated so that no part of the garage or carport will be in front of any part of the building line of the dwelling (b) are set back at least 5.5m from the boundary of the primary street (c) have a garage door / opening width not exceeding 7m (d) have a garage door / opening width not exceeding 50% of the site frontage unless the dwelling has two or more building levels at the building line fronting the same public street.
PO 20.2 Dwelling elevations facing public streets and common driveways make a positive contribution to the streetscape and the appearance of common driveway areas.	**DTS/DPF 20.2** Each dwelling includes at least 3 of the following design features within the building elevation facing a primary street, and at least 2 of the following design features within the building elevation facing any other public road (other than a laneway) or a common driveway: (a) a minimum of 30% of the building wall is set back an additional 300mm from the building line (b) a porch or portico projects at least 1m from the building wall (c) a balcony projects from the building wall (d) a verandah projects at least 1m from the building wall (e) eaves of a minimum 400mm width extend along the width of the front elevation (f) a minimum 30% of the width of the upper level projects forward from the lower level primary building line by at least 300mm (g) a minimum of two different materials or finishes are incorporated on the walls of the front building elevation, with a maximum of 80% of the building elevation in a single material or finish.

PO 20.3 The visual mass of larger buildings is reduced when viewed from adjoining allotments or public streets.	**DTS/DPF 20.3** None are applicable
Private Open Space	
PO 21.1 Dwellings are provided with suitable sized areas of usable private open space to meet the needs of occupants.	**DTS/DPF 21.1** Private open space is provided in accordance with Design in Urban Areas Table 1 - Private Open Space.
PO 21.2 Private open space is positioned to provide convenient access from internal living areas.	**DTS/DPF 21.2** Private open space is directly accessible from a habitable room.
Landscaping	
PO 22.1 Soft landscaping is incorporated into development to: (a) minimise heat absorption and reflection (b) contribute shade and shelter (c) provide for stormwater infiltration and biodiversity (d) enhance the appearance of land and streetscapes.	**DTS/DPF 22.1** Residential development incorporates soft landscaping with a minimum dimension of 700mm provided in accordance with (a) and (b): (a) a total area for the entire development site, including any common property, as determined by the following table: (b) at least 30% of any land between the primary street boundary and the primary building line.

Site area (or in the case of residential flat building or group dwelling(s), average site area) (m^2)	Minimum percentage of site
<150	10%
150-200	15%
>200-450	20%
>450	25%

Car parking, access and manoeuvrability	
PO 23.1 Enclosed car parking spaces are of dimensions to be functional, accessible and convenient.	**DTS/DPF 23.1** Residential car parking spaces enclosed by fencing, walls or other structures have the following internal dimensions (separate from any waste storage area): (a) single width car parking spaces: (i) a minimum length of 5.4m per space (ii) a minimum width of 3.0m (iii) a minimum garage door width of 2.4m (b) double width car parking spaces (side by side): (i) a minimum length of 5.4m (ii) a minimum width of 5.4m (iii) minimum garage door width of 2.4m per space.
PO 23.2 Uncovered car parking space are of dimensions to be functional, accessible and convenient.	**DTS/DPF 23.2** Uncovered car parking spaces have: (a) a minimum length of 5.4m (b) a minimum width of 2.4m (c) a minimum width between the centre line of the space and any fence, wall or other obstruction of 1.5m.
PO 23.3	**DTS/DPF 23.3**

Policy24	P&D Code (in effect) - Version 2023.13 - 31/08/2023
Driveways and access points are located and designed to facilitate safe access and egress while maximising land available for street tree planting, pedestrian movement, domestic waste collection, landscaped street frontages and on-street parking.	Driveways and access points satisfy (a) or (b): (a) sites with a frontage to a public road of 10m or less, have a width between 3.0 and 3.2 metres measured at the property boundary and are the only access point provided on the site (b) sites with a frontage to a public road greater than 10m: (i) have a maximum width of 5m measured at the property boundary and are the only access point provided on the site; (ii) have a width between 3.0 metres and 3.2 metres measured at the property boundary and no more than two access points are provided on site, separated by no less than 1m.
PO 23.4 Vehicle access is safe, convenient, minimises interruption to the operation of public roads and does not interfere with street infrastructure or street trees.	DTS/DPF 23.4 Vehicle access to designated car parking spaces satisfy (a) or (b): (a) is provided via a lawfully existing or authorised access point or an access point for which consent has been granted as part of an application for the division of land (b) where newly proposed, is set back: (i) 0.5m or more from any street furniture, street pole, infrastructure services pit, or other stormwater or utility infrastructure unless consent is provided from the asset owner (ii) 2m or more from the base of the trunk of a street tree unless consent is provided from the tree owner for a lesser distance (iii) 6m or more from the tangent point of an intersection of 2 or more roads (iv) outside of the marked lines or infrastructure dedicating a pedestrian crossing.
PO 23.5 Driveways are designed to enable safe and convenient vehicle movements from the public road to on-site parking spaces.	DTS/DPF 23.5 Driveways are designed and sited so that: (a) the gradient of the driveway does not exceed a grade of 1 in 4 and includes transitions to ensure a maximum grade change of 12.5% (1 in 8) for summit changes, and 15% (1 in 6.7) for sag changes, in accordance with AS 2890.1:2004 to prevent vehicles bottoming or scraping (b) the centreline of the driveway has an angle of no less than 70 degrees and no more than 110 degrees from the street boundary to which it takes its access as shown in the following diagram: 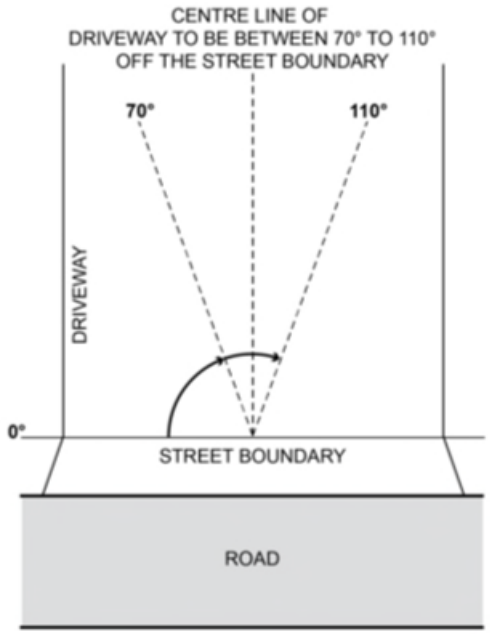 (c) if located to provide access from an alley, lane or right of way - the alley, land or right or way is at least 6.2m wide along the boundary of the allotment / site.
PO 23.6 Driveways and access points are designed and distributed to optimise the provision of on-street visitor parking.	DTS/DPF 23.6 Where on-street parking is available abutting the site's street frontage, on-street parking is retained in accordance with the following requirements: (a) minimum 0.33 on-street spaces per dwelling on the site (rounded up to the nearest whole number) (b) minimum car park length of 5.4m where a vehicle can enter or exit a space directly (c) minimum carpark length of 6m for an intermediate space located between two other parking spaces or to an end obstruction where the parking is indented.
Waste storage	
PO 24.1 Provision is made for the convenient storage of waste bins in a location screened from public view.	DTS/DPF 24.1 Where dwellings abut both side boundaries a waste bin storage area is provided behind the building line of each dwelling that:

Page 41 of 83 Printed on 9/6/2023

	(a) has a minimum area of $2m^2$ with a minimum dimension of 900mm (separate from any designated car parking spaces or private open space); and (b) has a continuous unobstructed path of travel (excluding moveable objects like gates, vehicles and roller doors) with a minimum width of 800mm between the waste bin storage area and the street.
Design of Transportable Buildings	
PO 25.1 The sub-floor space beneath transportable buildings is enclosed to give the appearance of a permanent structure.	**DTS/DPF 25.1** Buildings satisfy (a) or (b): (a) are not transportable (b) the sub-floor space between the building and ground level is clad in a material and finish consistent with the building.
Residential Development - Medium and High Rise (including serviced apartments)	
Outlook and Visual Privacy	
PO 26.1 Ground level dwellings have a satisfactory short range visual outlook to public, communal or private open space.	**DTS/DPF 26.1** Buildings: (a) provide a habitable room at ground or first level with a window facing toward the street (b) limit the height / extent of solid walls or fences facing the street to 1.2m high above the footpath level or, where higher, to 50% of the site frontage.
PO 26.2 The visual privacy of ground level dwellings within multi-level buildings is protected.	**DTS/DPF 26.2** The finished floor level of ground level dwellings in multi-storey developments is raised by up to 1.2m.
Private Open Space	
PO 27.1 Dwellings are provided with suitable sized areas of usable private open space to meet the needs of occupants.	**DTS/DPF 27.1** Private open space provided in accordance with Design in Urban Areas Table 1 - Private Open Space.
Residential amenity in multi-level buildings	
PO 28.1 Residential accommodation within multi-level buildings have habitable rooms, windows and balconies designed and positioned to be separated from those of other dwellings and accommodation to provide visual and acoustic privacy and allow for natural ventilation and the infiltration of daylight into interior and outdoor spaces.	**DTS/DPF 28.1** Habitable rooms and balconies of independent dwellings and accommodation are separated by at least 6m from one another where there is a direct line of sight between them and 3m or more from a side or rear property boundary.
PO 28.2 Balconies are designed, positioned and integrated into the overall architectural form and detail of the development to: (a) respond to daylight, wind, and acoustic conditions to maximise comfort and provide visual privacy (b) allow views and casual surveillance of the street while providing for safety and visual privacy of nearby living spaces and private outdoor areas.	**DTS/DPF 28.2** Balconies utilise one or a combination of the following design elements: (a) sun screens (b) pergolas (c) louvres (d) green facades (e) openable walls.
PO 28.3 Balconies are of sufficient size and depth to accommodate outdoor seating and promote indoor / outdoor living.	**DTS/DPF 28.3** Balconies open directly from a habitable room and incorporate a minimum dimension of 2m.
PO 28.4 Dwellings are provided with sufficient space for storage to meet likely occupant needs.	**DTS/DPF 28.4** Dwellings (not including student accommodation or serviced apartments) are provided with storage at the following rates with at least 50% or more of the storage volume to be provided within the dwelling: (a) studio: not less than $6m^3$ (b) 1 bedroom dwelling / apartment: not less than $8m^3$ (c) 2 bedroom dwelling / apartment: not less than $10m^3$ (d) 3+ bedroom dwelling / apartment: not less than $12m^3$.
PO 28.5 Dwellings that use light wells for access to daylight, outlook and ventilation for habitable rooms, are designed to ensure a reasonable living amenity is provided.	**DTS/DPF 28.5** Light wells: (a) are not used as the primary source of outlook for living rooms (b) up to 18m in height have a minimum horizontal dimension of 3m, or 6m if overlooked by bedrooms (c) above 18m in height have a minimum horizontal dimension of 6m, or 9m if overlooked by bedrooms.

PO 28.6 Attached or abutting dwellings are designed to minimise the transmission of sound between dwellings and, in particular, to protect bedrooms from possible noise intrusions.	**DTS/DPF 28.6** None are applicable.
PO 28.7 Dwellings are designed so that internal structural columns correspond with the position of internal walls to ensure that the space within the dwelling/apartment is useable.	**DTS/DPF 28.7** None are applicable.
Dwelling Configuration	
PO 29.1 Buildings containing in excess of 10 dwellings provide a variety of dwelling sizes and a range in the number of bedrooms per dwelling to contribute to housing diversity.	**DTS/DPF 29.1** Buildings containing in excess of 10 dwellings provide at least one of each of the following: (a) studio (where there is no separate bedroom) (b) 1 bedroom dwelling / apartment with a floor area of at least $50m^2$ (c) 2 bedroom dwelling / apartment with a floor area of at least $65m^2$ (d) 3+ bedroom dwelling / apartment with a floor area of at least $80m^2$, and any dwelling over 3 bedrooms provides an additional $15m^2$ for every additional bedroom.
PO 29.2 Dwellings located on the ground floor of multi-level buildings with 3 or more bedrooms have the windows of their habitable rooms overlooking internal courtyard space or other public space, where possible.	**DTS/DPF 29.2** None are applicable.
Common Areas	
PO 30.1 The size of lifts, lobbies and corridors is sufficient to accommodate movement of bicycles, strollers, mobility aids and visitor waiting areas.	**DTS/DPF 30.1** Common corridor or circulation areas: (a) have a minimum ceiling height of 2.7m (b) provide access to no more than 8 dwellings (c) incorporate a wider section at apartment entries where the corridors exceed 12m in length from a core.
Group Dwellings, Residential Flat Buildings and Battle-axe Development	
Amenity	
PO 31.1 Dwellings are of a suitable size to provide a high standard of amenity for occupants.	**DTS/DPF 31.1** Dwellings have a minimum internal floor area in accordance with the following table:

Number of bedrooms	Minimum internal floor area
Studio	$35m^2$
1 bedroom	$50m^2$
2 bedroom	$65m^2$
3+ bedrooms	$80m^2$ and any dwelling over 3 bedrooms provides an additional $15m^2$ for every additional bedroom

PO 31.2 The orientation and siting of buildings minimises impacts on the amenity, outlook and privacy of occupants and neighbours.	**DTS/DPF 31.2** None are applicable.
PO 31.3 Development maximises the number of dwellings that face public open space and public streets and limits dwellings oriented towards adjoining properties.	**DTS/DPF 31.3** None are applicable.
PO 31.4 Battle-axe development is appropriately sited and designed to respond to the existing neighbourhood context.	**DTS/DPF 31.4** Dwelling sites/allotments are not in the form of a battle-axe arrangement.
Communal Open Space	
PO 32.1 Private open space provision may be substituted for communal open space which is designed and sited to meet the recreation and amenity needs of residents.	**DTS/DPF 32.1** None are applicable.

Policy24	P&D Code (in effect) - Version 2023.13 - 31/08/2023
PO 32.2 Communal open space is of sufficient size and dimensions to cater for group recreation.	DTS/DPF 32.2 Communal open space incorporates a minimum dimension of 5 metres.
PO 32.3 Communal open space is designed and sited to: (a) be conveniently accessed by the dwellings which it services (b) have regard to acoustic, safety, security and wind effects.	DTS/DPF 32.3 None are applicable.
PO 32.4 Communal open space contains landscaping and facilities that are functional, attractive and encourage recreational use.	DTS/DPF 32.4 None are applicable.
PO 32.5 Communal open space is designed and sited to: (a) in relation to rooftop or elevated gardens, minimise overlooking into habitable room windows or onto the useable private open space of other dwellings (b) in relation to ground floor communal space, be overlooked by habitable rooms to facilitate passive surveillance.	DTS/DPF 32.5 None are applicable.
Car parking, access and manoeuvrability	
PO 33.1 Driveways and access points are designed and distributed to optimise the provision of on-street visitor parking.	DTS/DPF 33.1 Where on-street parking is available directly adjacent the site, on-street parking is retained adjacent the subject site in accordance with the following requirements: (a) minimum 0.33 on-street car parks per proposed dwelling (rounded up to the nearest whole number) (b) minimum car park length of 5.4m where a vehicle can enter or exit a space directly (c) minimum carpark length of 6m for an intermediate space located between two other parking spaces or to an end obstruction where the parking is indented.
PO 33.2 The number of vehicular access points onto public roads is minimised to reduce interruption of the footpath and positively contribute to public safety and walkability.	DTS/DPF 33.2 Access to group dwellings or dwellings within a residential flat building is provided via a single common driveway.
PO 33.3 Residential driveways that service more than one dwelling are designed to allow safe and convenient movement.	DTS/DPF 33.3 Driveways that service more than 1 dwelling or a dwelling on a battle-axe site: (a) have a minimum width of 3m (b) for driveways servicing more than 3 dwellings: (i) have a width of 5.5m or more and a length of 6m or more at the kerb of the primary street (ii) where the driveway length exceeds 30m, incorporate a passing point at least every 30 metres with a minimum width of 5.5m and a minimum length of 6m.
PO 33.4 Residential driveways that service more than one dwelling or a dwelling on a battle-axe site are designed to allow passenger vehicles to enter and exit and manoeuvre within the site in a safe and convenient manner.	DTS/DPF 33.4 Driveways providing access to more than one dwelling, or a dwelling on a battle-axe site, allow a B85 passenger vehicle to enter and exit the garages or parking spaces in no more than a three-point turn manoeuvre.
PO 33.5 Dwellings are adequately separated from common driveways and manoeuvring areas.	DTS/DPF 33.5 Dwelling walls with entry doors or ground level habitable room windows are set back at least 1.5m from any driveway or area designated for the movement and manoeuvring of vehicles.
Soft landscaping	
PO 34.1 Soft landscaping is provided between dwellings and common driveways to improve the outlook for occupants and appearance of common areas.	DTS/DPF 34.1 Other than where located directly in front of a garage or building entry, soft landscaping with a minimum dimension of 1m is provided between a dwelling and common driveway.
PO 34.2 Battle-axe or common driveways incorporate landscaping and permeability to improve appearance and assist in stormwater management.	DTS/DPF 34.2 Battle-axe or common driveways satisfy (a) and (b): (a) are constructed of a minimum of 50% permeable or porous material (b) where the driveway is located directly adjacent the side or rear boundary of the site, soft landscaping with a minimum dimension of 1m is provided between the driveway and site boundary (excluding along the perimeter of a passing point).
Bin Facilities / Waste Storage	
PO 35.1 Provision is made for suitable mailbox facilities close to the major pedestrian entry to the site or conveniently located considering the nature of accommodation and mobility of occupants.	DTS/DPF 35.1 None are applicable.

PO 35.2 Provision is made for suitable external clothes drying facilities.	**DTS/DPF 35.2** None are applicable.
PO 35.3 Provision is made for suitable household waste and recyclable material storage facilities which are: (a) located away, or screened, from public view, and (b) conveniently located in proximity to dwellings and the waste collection point.	**DTS/DPF 35.3** None are applicable.
PO 35.4 Waste and recyclable material storage areas are located away from dwellings.	**DTS/DPF 35.4** Dedicated waste and recyclable material storage areas are located at least 3m from any habitable room window.
PO 35.5 Where waste bins cannot be conveniently collected from the street, provision is made for on-site waste collection, designed to accommodate the safe and convenient access, egress and movement of waste collection vehicles.	**DTS/DPF 35.5** None are applicable.
PO 35.6 Services including gas and water meters are conveniently located and screened from public view.	**DTS/DPF 35.6** None are applicable.
Water sensitive urban design	
PO 36.1 Residential development creating a common driveway / access includes stormwater management systems that minimise the discharge of sediment, suspended solids, organic matter, nutrients, bacteria, litter and other contaminants to the stormwater system, watercourses or other water bodies.	**DTS/DPF 36.1** None are applicable.
PO 36.2 Residential development creating a common driveway / access includes a stormwater management system designed to mitigate peak flows and manage the rate and duration of stormwater discharges from the site to ensure that the development does not increase the peak flows in downstream systems.	**DTS/DPF 36.2** None are applicable.
Supported Accommodation and retirement facilities	
Siting, Configuration and Design	
PO 37.1 Supported accommodation and housing for aged persons and people with disabilities is located where on-site movement of residents is not unduly restricted by the slope of the land.	**DTS/DPF 37.1** None are applicable.
PO 37.2 Universal design features are incorporated to provide options for people living with disabilities or limited mobility and / or to facilitate ageing in place.	**DTS/DPF 37.2** None are applicable.
Movement and Access	
PO 38.1 Development is designed to support safe and convenient access and movement for residents by providing: (a) ground-level access or lifted access to all units (b) level entry porches, ramps, paths, driveways, passenger loading areas and areas adjacent to footpaths that allow for the passing of wheelchairs and resting places (c) car parks with gradients no steeper than 1-in-40, and of sufficient area to provide for wheelchair manoeuvrability (d) kerb ramps at pedestrian crossing points.	**DTS/DPF 38.1** None are applicable.
Communal Open Space	
PO 39.1 Development is designed to provide attractive, convenient and comfortable indoor and outdoor communal areas to be used by residents and visitors.	**DTS/DPF 39.1** None are applicable.
PO 39.2 Private open space provision may be substituted for communal open space which is designed and	**DTS/DPF 39.2** None are applicable.

sited to meet the recreation and amenity needs of residents.	
PO 39.3 Communal open space is of sufficient size and dimensions to cater for group recreation.	**DTS/DPF 39.3** Communal open space incorporates a minimum dimension of 5 metres.
PO 39.4 Communal open space is designed and sited to: (a) be conveniently accessed by the dwellings which it services (b) have regard to acoustic, safety, security and wind effects.	**DTS/DPF 39.4** None are applicable.
PO 39.5 Communal open space contains landscaping and facilities that are functional, attractive and encourage recreational use.	**DTS/DPF 39.5** None are applicable.
PO 39.6 Communal open space is designed and sited to: (a) in relation to rooftop or elevated gardens, minimise overlooking into habitable room windows or onto the usable private open space of other dwellings (b) in relation to ground floor communal space, be overlooked by habitable rooms to facilitate passive surveillance.	**DTS/DPF 39.6** None are applicable.
Site Facilities / Waste Storage	
PO 40.1 Development is designed to provide storage areas for personal items and specialised equipment such as small electric powered vehicles, including facilities for the recharging of small electric-powered vehicles.	**DTS/DPF 40.1** None are applicable.
PO 40.2 Provision is made for suitable mailbox facilities close to the major pedestrian entry to the site or conveniently located considering the nature of accommodation and mobility of occupants.	**DTS/DPF 40.2** None are applicable.
PO 40.3 Provision is made for suitable external clothes drying facilities.	**DTS/DPF 40.3** None are applicable.
PO 40.4 Provision is made for suitable household waste and recyclable material storage facilities conveniently located away, or screened, from view.	**DTS/DPF 40.4** None are applicable.
PO 40.5 Waste and recyclable material storage areas are located away from dwellings.	**DTS/DPF 40.5** Dedicated waste and recyclable material storage areas are located at least 3m from any habitable room window.
PO 40.6 Provision is made for on-site waste collection where 10 or more bins are to be collected at any one time.	**DTS/DPF 40.6** None are applicable.
PO 40.7 Services, including gas and water meters, are conveniently located and screened from public view.	**DTS/DPF 40.7** None are applicable.
Student Accommodation	
PO 41.1 Student accommodation is designed to provide safe, secure, attractive, convenient and comfortable living conditions for residents, including an internal layout and facilities that are designed to provide sufficient space and amenity for the requirements of student life and promote social interaction.	**DTS/DPF 41.1** Student accommodation provides: (a) a range of living options to meet a variety of accommodation needs, such as one-bedroom, two-bedroom and disability access units (b) common or shared facilities to enable a more efficient use of space, including: (i) shared cooking, laundry and external drying facilities (ii) internal and external communal and private open space provided in accordance with Design in Urban Areas Table 1 - Private Open Space (iii) common storage facilities at the rate of 8m^3 for every 2 dwellings or students (iv) common on-site parking in accordance with Transport, Access and Parking Table 1 - General Off-Street Car Parking Requirements or Table 2 - Off-Street Car Parking Requirements in Designated Areas (v) bicycle parking at the rate of one space for every 2 students.

PO 41.2 Student accommodation is designed to provide easy adaptation of the building to accommodate an alternative use of the building in the event it is no longer required for student housing.	**DTS/DPF 41.2** None are applicable.
All non-residential development	
Water Sensitive Design	
PO 42.1 Development likely to result in risk of export of sediment, suspended solids, organic matter, nutrients, oil and grease include stormwater management systems designed to minimise pollutants entering stormwater.	**DTS/DPF 42.1** None are applicable.
PO 42.2 Water discharged from a development site is of a physical, chemical and biological condition equivalent to or better than its pre-developed state.	**DTS/DPF 42.2** None are applicable.
PO 42.3 Development includes stormwater management systems to mitigate peak flows and manage the rate and duration of stormwater discharges from the site to ensure that development does not increase peak flows in downstream systems.	**DTS/DPF 42.3** None are applicable.
Wash-down and Waste Loading and Unloading	
PO 43.1 Areas for activities including loading and unloading, storage of waste refuse bins in commercial and industrial development or wash-down areas used for the cleaning of vehicles, plant or equipment are: (a) designed to contain all wastewater likely to pollute stormwater within a bunded and roofed area to exclude the entry of external surface stormwater run-off (b) paved with an impervious material to facilitate wastewater collection (c) of sufficient size to prevent 'splash-out' or 'over-spray' of wastewater from the wash-down area (d) are designed to drain wastewater to either: (i) a treatment device such as a sediment trap and coalescing plate oil separator with subsequent disposal to a sewer, private or Community Wastewater Management Scheme or (ii) a holding tank and its subsequent removal off-site on a regular basis.	**DTS/DPF 43.1** None are applicable.
Laneway Development	
Infrastructure and Access	
PO 44.1 Development with a primary street comprising a laneway, alley, lane, right of way or similar minor thoroughfare only occurs where: (a) existing utility infrastructure and services are capable of accommodating the development (b) the primary street can support access by emergency and regular service vehicles (such as waste collection) (c) it does not require the provision or upgrading of infrastructure on public land (such as footpaths and stormwater management systems) (d) safety of pedestrians or vehicle movement is maintained (e) any necessary grade transition is accommodated within the site of the development to support an appropriate development intensity and orderly development of land fronting minor thoroughfares.	**DTS/DPF 44.1** Development with a primary street frontage that is not an alley, lane, right of way or similar public thoroughfare.
Decks	
Design and Siting	
PO 45.1 Decks are designed and sited to: (a) complement the associated building form (b) minimise impacts on the streetscape through siting behind the building line of the principal building (unless on a significant allotment or open space) (c) minimise cut and fill and overall massing when viewed from adjacent land.	**DTS/DPF 45.1** Decks: (a) where ancillary to a dwelling: (i) are not constructed, added to or altered so that any part is situated: A. in front of any part of the building line of the dwelling to which it is ancillary or B. within 900mm of a boundary of the allotment with a secondary street (if the land has boundaries on two or more roads) (ii) are set back at least 900mm from side or rear allotment boundaries (iii) when attached to the dwelling, has a finished floor level consistent with the finished ground floor level of the dwelling (iv) where associated with a residential use, retains a total area of soft landscaping for the entire development site, including any common property, with a minimum dimension of 700mm in accordance with (A) or (B), whichever is less: A. a total area is determined by the following table: **Site area (or in** **Minimum**

	the case of residential flat building or group dwelling(s), average site area) (m^2) / percentage of site <150 / 10% 150-200 / 15% >200-450 / 20% >450 / 25% B. the amount of existing soft landscaping prior to the development occurring. (b) where in association with a non-residential use: (i) are set back at least 2 metres from the boundary of an allotment used for residential purposes. (ii) are set back at least 2 metres from a public road. (iii) have a floor area not exceeding 25m^2 (c) in all cases, has a finished floor level not exceeding 1 metre above natural ground level at any point.
PO 45.2 Decks are designed and sited to minimise direct overlooking of habitable rooms and private open spaces of adjoining residential uses in neighbourhood-type zones through suitable floor levels, screening and siting taking into account the slope of the subject land, existing vegetation on the subject land, and fencing.	DTS/DPF 45.2 Decks with a finished floor level/s 500mm or more above natural ground level facing side or rear boundaries shared with a residential use in a neighbourhood-type zone incorporate screening with a maximum of 25% transparency/openings, permanently fixed to the outer edge of the deck not less than 1.5 m above the finished floor level/s.
PO 45.3 Decks used for outdoor dining, entertainment or other commercial uses provide carparking in accordance with the primary use of the deck.	DTS/DPF 45.3 Decks used for commercial purposes do not result in less on-site car parking for the primary use of the subject land than specified in Transport, Access and Parking Table 1 - General Off-Street Car Parking Requirements or Table 2 - Off-Street Car Parking Requirements in Designated Areas.

Table 1 - Private Open Space

Dwelling Type	Dwelling / Site Configuration	Minimum Rate
Dwelling (at ground level, other than a residential flat building that includes above ground dwellings)		Total private open space area: (a) Site area <301m^2: 24m^2 located behind the building line. (b) Site area ≥ 301m^2: 60m^2 located behind the building line. Minimum directly accessible from a living room: 16m^2 / with a minimum dimension 3m.
Cabin or caravan (permanently fixed to the ground) in a residential park or caravan and tourist park		Total area: 16m^2, which may be uses as second car parking space, provided on each site intended for residential occupation.
Dwelling in a residential flat building or mixed use building which incorporate above ground level dwellings	Dwellings at ground level:	15m^2 / minimum dimension 3m
	Dwellings above ground level:	
	Studio (no separate bedroom)	4m^2 / minimum dimension 1.8m
	One bedroom dwelling	8m^2 / minimum dimension 2.1m
	Two bedroom dwelling	11m^2 / minimum dimension 2.4m
	Three + bedroom dwelling	15 m^2 / minimum dimension 2.6m

Forestry

Assessment Provisions (AP)

Desired Outcome (DO)

Desired Outcome	
DO 1	Commercial forestry is designed and sited to maximise economic benefits whilst managing potential negative impacts on the environment, transport networks, surrounding land uses and landscapes.

Performance Outcomes (PO) and Deemed-to-Satisfy (DTS) Criteria / Designated Performance Feature (DPF)

Performance Outcome	Deemed-to-Satisfy Criteria / Designated Performance Feature
Siting	
PO 1.1 Commercial forestry plantations are established where there is no detrimental effect on the physical environment or scenic quality of the rural landscape.	**DTS/DPF 1.1** None are applicable.
PO 1.2 Commercial forestry plantations are established on slopes that are stable to minimise the risk of soil erosion.	**DTS/DPF 1.2** Commercial forestry plantations are not located on land with a slope exceeding 20% (1-in-5).
PO 1.3 Commercial forestry plantations and operations associated with their establishment, management and harvesting are appropriately set back from any sensitive receiver to minimise fire risk and noise disturbance.	**DTS/DPF 1.3** Commercial forestry plantations and operations associated with their establishment, management and harvesting are set back 50m or more from any sensitive receiver.
Water Protection	
PO 2.1 Commercial forestry plantations incorporate artificial drainage lines (i.e. culverts, runoffs and constructed drains) integrated with natural drainage lines to minimise concentrated water flows onto or from plantation areas.	**DTS/DPF 2.1** None are applicable.
PO 2.2 Appropriate siting, layout and design measures are adopted to minimise the impact of commercial forestry plantations on surface water resources.	**DTS/DPF 2.2** Commercial forestry plantations: (a) do not involve cultivation (excluding spot cultivation) in drainage lines (b) are set back 20m or more from the banks of any major watercourse (a third order or higher watercourse), lake, reservoir, wetland or sinkhole (with direct connection to an aquifer) (c) are set back 10m or more from the banks of any first or second order watercourse or sinkhole (with no direct connection to an aquifer).
Fire Management	
PO 3.1 Commercial forestry plantations incorporate appropriate firebreaks and fire management design elements.	**DTS/DPF 3.1** Commercial forestry plantations provide: (a) 7m or more wide external boundary firebreaks for plantations of 40ha or less (b) 10m or more wide external boundary firebreaks for plantations of between 40ha and 100ha (c) 20m or more wide external boundary firebreaks, or 10m with an additional 10m or more of fuel-reduced plantation, for plantations of 100ha or greater. Note: Firebreaks prescribed above (as well as access tracks) may be included within the setback buffer distances prescribed by other policies of the Code.
PO 3.2 Commercial forestry plantations incorporate appropriate fire management access tracks.	**DTS/DPF 3.2** Commercial forestry plantation fire management access tracks: (a) are incorporated within all firebreaks (b) are 7m or more wide with a vertical clearance of 4m or more (c) are aligned to provide straight through access at junctions, or if they are a no through access track are appropriately signposted and provide suitable turnaround areas for fire-fighting vehicles (d) partition the plantation into units of 40ha or less in area.
Powerline Clearance	
PO 4.1 Commercial forestry plantations achieve and maintain appropriate clearances from aboveground	**DTS/DPF 4.1** Commercial forestry plantations incorporating trees with an expected mature height of greater than

powerlines.

6m meet the clearance requirements listed in the following table:

Voltage of transmission line	Tower or Pole	Minimum horizontal clearance distance between plantings and transmission lines
500 kV	Tower	38m
275 kV	Tower	25m
132 kV	Tower	30m
132 kV	Pole	20m
66 kV	Pole	20m
Less than 66 kV	Pole	20m

Housing Renewal

Assessment Provisions (AP)

The Housing Renewal General Development Policies are only applicable to dwellings or residential flat building undertaken by:

(a) the South Australian Housing Trust either individually or jointly with other persons or bodies
or
(b) a provider registered under the Community Housing National Law participating in a program relating to the renewal of housing endorsed by the South Australian Housing Trust.

Desired Outcome (DO)

Desired Outcome	
DO 1	Renewed residential environments replace older social housing and provide new social housing infrastructure and other housing options and tenures to enhance the residential amenity of the local area.

Performance Outcomes (PO) and Deemed-to-Satisfy (DTS) Criteria / Designated Performance Feature (DPF)

Performance Outcome	Deemed-to-Satisfy Criteria / Designated Performance Feature
Land Use and Intensity	
PO 1.1 Residential development provides a range of housing choices.	**DTS/DPF 1.1** Development comprises one or more of the following: (a) detached dwellings (b) semi-detached dwellings (c) row dwellings (d) group dwellings (e) residential flat buildings.
PO 1.2 Medium-density housing options or higher are located in close proximity to public transit, open space and/or activity centres.	**DTS/DPF 1.2** None are applicable.
Building Height	
PO 2.1 Buildings generally do not exceed 3 building levels unless in locations close to public transport, centres and/or open space.	**DTS/DPF 2.1** Building height (excluding garages, carports and outbuildings) does not exceed 3 building levels and 12m and wall height does not exceed 9m (not including a gable end).
PO 2.2 Medium or high rise residential flat buildings located within or at the interface with zones which restrict heights to a maximum of 2 building levels transition down in scale and height towards the boundary of that zone, other than where it is a street boundary.	**DTS/DPF 2.2** None are applicable.
Primary Street Setback	

Policy24	P&D Code (in effect) - Version 2023.13 - 31/08/2023
PO 3.1 Buildings are set back from the primary street boundary to contribute to an attractive streetscape character.	DTS/DPF 3.1 Buildings are no closer to the primary street (excluding any balcony, verandah, porch, awning or similar structure) than 3m.
Secondary Street Setback	
PO 4.1 Buildings are set back from secondary street boundaries to maintain separation between building walls and public streets and contribute to a suburban streetscape character.	DTS/DPF 4.1 Buildings are set back at least 900mm from the boundary of the allotment with a secondary street frontage.
Boundary Walls	
PO 5.1 Boundary walls are limited in height and length to manage visual impacts and access to natural light and ventilation.	DTS/DPF 5.1 Except where the dwelling is located on a central site within a row dwelling or terrace arrangement, dwellings with side boundary walls are sited on only one side boundary and satisfy (a) or (b): (a) adjoin or abut a boundary wall of a building on adjoining land for the same length and height (b) do not: (i) exceed 3.2m in height from the lower of the natural or finished ground level (ii) exceed 11.5m in length (iii) when combined with other walls on the boundary of the subject development site, a maximum 45% of the length of the boundary (iv) encroach within 3 metres of any other existing or proposed boundary walls on the subject land.
PO 5.2 Dwellings in a semi-detached, row or terrace arrangement maintain space between buildings consistent with a suburban streetscape character.	DTS/DPF 5.2 Dwellings in a semi-detached or row arrangement are set back 900mm or more from side boundaries shared with allotments outside the development site, except for a carport or garage.
Side Boundary Setback	
PO 6.1 Buildings are set back from side boundaries to provide: (a) separation between dwellings in a way that contributes to a suburban character (b) access to natural light and ventilation for neighbours.	DTS/DPF 6.1 Other than walls located on a side boundary, buildings are set back from side boundaries in accordance with the following: (a) where the wall height does not exceed 3m - at least 900mm (b) for a wall that is not south facing and the wall height exceeds 3m - at least 900mm from the boundary of the site plus a distance of 1/3 of the extent to which the height of the wall exceeds 3m from the top of the footings (c) for a wall that is south facing and the wall height exceeds 3m - at least 1.9m from the boundary of the site plus a distance of 1/3 of the extent to which the height of the wall exceeds 3m from the top of the footings.
Rear Boundary Setback	
PO 7.1 Buildings are set back from rear boundaries to provide: (a) separation between dwellings in a way that contributes to a suburban character (b) access to natural light and ventilation for neighbours (c) private open space (d) space for landscaping and vegetation.	DTS/DPF 7.1 Dwellings are set back from the rear boundary: (a) 3m or more for the first building level (b) 5m or more for any subsequent building level.
Building elevation design	
PO 8.1 Dwelling elevations facing public streets and common driveways make a positive contribution to the streetscape and common driveway areas.	DTS/DPF 8.1 Each dwelling includes at least 3 of the following design features within the building elevation facing a primary street, and at least 2 of the following design features within the building elevation facing any other public road (other than a laneway) or a common driveway: (a) a minimum of 30% of the building elevation is set back an additional 300mm from the building line (b) a porch or portico projects at least 1m from the building elevation (c) a balcony projects from the building elevation (d) a verandah projects at least 1m from the building elevation (e) eaves of a minimum 400mm width extend along the width of the front elevation (f) a minimum 30% of the width of the upper level projects forward from the lower level primary building line by at least 300mm. (g) a minimum of two different materials or finishes are incorporated on the walls of the building elevation, with a maximum of 80% of the building elevation in a single material or finish.
PO 8.2 Dwellings incorporate windows along primary street frontages to encourage passive surveillance and make a positive contribution to the streetscape.	DTS/DPF 8.2 Each dwelling with a frontage to a public street: (a) includes at least one window facing the primary street from a habitable room that has a minimum internal room dimension of 2.4m (b) has an aggregate window area of at least $2m^2$ facing the primary street
PO 8.3	DTS/DPF 8.3

The visual mass of larger buildings is reduced when viewed from adjoining allotments or public streets.	None are applicable.
PO 8.4 Built form considers local context and provides a quality design response through scale, massing, materials, colours and architectural expression.	**DTS/DPF 8.4** None are applicable.
PO 8.5 Entrances to multi-storey buildings are: (a) oriented towards the street (b) visible and easily identifiable from the street (c) designed to include a common mail box structure.	**DTS/DPF 8.5** None are applicable.
Outlook and amenity	
PO 9.1 Living rooms have an external outlook to provide a high standard of amenity for occupants.	**DTS/DPF 9.1** A living room of a dwelling incorporates a window with an external outlook towards the street frontage or private open space.
PO 9.2 Bedrooms are separated or shielded from active communal recreation areas, common access areas and vehicle parking areas and access ways to mitigate noise and artificial light intrusion.	**DTS/DPF 9.2** None are applicable.
Private Open Space	
PO 10.1 Dwellings are provided with suitable sized areas of usable private open space to meet the needs of occupants.	**DTS/DPF 10.1** Private open space is provided in accordance with the following table:

Dwelling Type	Dwelling / Site Configuration	Minimum Rate
Dwelling (at ground level)		Total area: 24m^2 located behind the building line Minimum adjacent to a living room: 16m^2 with a minimum dimension 3m
Dwelling (above ground level)	Studio	4m^2 / minimum dimension 1.8m
	One bedroom dwelling	8m^2 / minimum dimension 2.1m
	Two bedroom dwelling	11m^2 / minimum dimension 2.4m
	Three + bedroom dwelling	15 m^2 / minimum dimension 2.6m

PO 10.2 Private open space positioned to provide convenient access from internal living areas.	**DTS/DPF 10.2** At least 50% of the required area of private open space is accessible from a habitable room.
PO 10.3 Private open space is positioned and designed to: (a) provide useable outdoor space that suits the needs of occupants; (b) takes advantage of desirable orientation and vistas; and (c) adequately define public and private space.	**DTS/DPF 10.3** None are applicable.
Visual privacy	
PO 11.1 Development mitigates direct overlooking from upper level windows to habitable rooms and private open spaces of adjoining residential uses.	**DTS/DPF 11.1** Upper level windows facing side or rear boundaries shared with another residential allotment/site satisfy one of the following: (a) are permanently obscured to a height of 1.5m above finished floor level and are fixed or not capable of being opened more than 200mm (b) have sill heights greater than or equal to 1.5m above finished floor level (c) incorporate screening with a maximum of 25% openings, permanently fixed no more than 500mm from the window surface and sited adjacent to any part of the window less than 1.5m above the finished floor.

PO 11.2 Development mitigates direct overlooking from upper level balconies and terraces to habitable rooms and private open space of adjoining residential uses.	**DTS/DPF 11.2** One of the following is satisfied: **(a)** the longest side of the balcony or terrace will face a public road, public road reserve or public reserve that is at least 15m wide in all places faced by the balcony or terrace or **(b)** all sides of balconies or terraces on upper building levels are permanently obscured by screening with a maximum 25% transparency/openings fixed to a minimum height of: **(i)** 1.5m above finished floor level where the balcony is located at least 15 metres from the nearest habitable window of a dwelling on adjacent land or **(ii)** 1.7m above finished floor level in all other cases
Landscaping	
PO 12.1 Soft landscaping is incorporated into development to: **(a)** minimise heat absorption and reflection **(b)** maximise shade and shelter **(c)** maximise stormwater infiltration and biodiversity **(d)** enhance the appearance of land and streetscapes.	**DTS/DPF 12.1** Residential development incorporates pervious areas for soft landscaping with a minimum dimension of 700mm provided in accordance with (a) and (b): **(a)** a total area as determined by the following table: Dwelling site area (or in the case of residential flat building or group dwelling(s), average site area) (m²) — Minimum percentage of site <150 — 10% <200 — 15% 200-450 — 20% >450 — 25% **(b)** at least 30% of land between the road boundary and the building line.
Water Sensitive Design	
PO 13.1 Residential development is designed to capture and use stormwater to: **(a)** maximise efficient use of water resources **(b)** manage peak stormwater runoff flows and volume to ensure the carrying capacities of downstream systems are not overloaded **(c)** manage runoff quality to maintain, as close as practical, pre-development conditions.	**DTS/DPF 13.1** None are applicable.
Car Parking	
PO 14.1 On-site car parking is provided to meet the anticipated demand of residents, with less on-site parking in areas in close proximity to public transport.	**DTS/DPF 14.1** On-site car parking is provided at the following rates per dwelling: **(a)** 2 or fewer bedrooms - 1 car parking space **(b)** 3 or more bedrooms - 2 car parking spaces.
PO 14.2 Enclosed car parking spaces are of dimensions to be functional, accessible and convenient.	**DTS/DPF 14.2** Residential parking spaces enclosed by fencing, walls or other obstructions with the following internal dimensions (separate from any waste storage area): **(a)** single parking spaces: **(i)** a minimum length of 5.4m **(ii)** a minimum width of 3.0m **(iii)** a minimum garage door width of 2.4m **(b)** double parking spaces (side by side): **(i)** a minimum length of 5.4m **(ii)** a minimum width of 5.5m **(iii)** minimum garage door width of 2.4m per space.
PO 14.3 Uncovered car parking spaces are of dimensions to be functional, accessible and convenient.	**DTS/DPF 14.3** Uncovered car parking spaces have: **(a)** a minimum length of 5.4m **(b)** a minimum width of 2.4m **(c)** a minimum width between the centre line of the space and any fence, wall or other obstruction of 1.5m.
PO 14.4 Residential flat buildings and group dwelling developments provide sufficient on-site visitor car parking to cater for anticipated demand.	**DTS/DPF 14.4** Visitor car parking for group and residential flat buildings incorporating 4 or more dwellings is provided on-site at a minimum ratio of 0.25 car parking spaces per dwelling.
PO 14.5 Residential flat buildings provide dedicated areas for bicycle parking.	**DTS/DPF 14.5** Residential flat buildings provide one bicycle parking space per dwelling.
Overlooking	

PO 15.1 Development minimises overshadowing of the private open spaces of adjoining land by ensuring that ground level open space associated with residential buildings receive direct sunlight for a minimum of 2 hours between 9am and 3pm on 21 June.	**DTS/DPF 15.1** None are applicable.
Waste	
PO 16.1 Provision is made for the convenient storage of waste bins in a location screened from public view.	**DTS/DPF 16.1** A waste bin storage area is provided behind the primary building line that: (a) has a minimum area of $2m^2$ with a minimum dimension of 900mm (separate from any designated car parking spaces or private open space); and (b) has a continuous unobstructed path of travel (excluding moveable objects like gates, vehicles and roller doors) with a minimum width of 800mm between the waste bin storage area and the street.
PO 16.2 Residential flat buildings provide a dedicated area for the on-site storage of waste which is: (a) easily and safely accessible for residents and for collection vehicles (b) screened from adjoining land and public roads (c) of sufficient dimensions to be able to accommodate the waste storage needs of the development considering the intensity and nature of the development and the frequency of collection.	**DTS/DPF 16.2** None are applicable.
Vehicle Access	
PO 17.1 Driveways are located and designed to facilitate safe access and egress while maximising land available for street tree planting, landscaped street frontages and on-street parking.	**DTS/DPF 17.1** None are applicable.
PO 17.2 Vehicle access is safe, convenient, minimises interruption to the operation of public roads and does not interfere with street infrastructure or street trees.	**DTS/DPF 17.2** Vehicle access to designated car parking spaces satisfy (a) or (b): (a) is provided via a lawfully existing or authorised access point or an access point for which consent has been granted as part of an application for the division of land (b) where newly proposed, is set back: (i) 0.5m or more from any street furniture, street pole, infrastructure services pit, or other stormwater or utility infrastructure unless consent is provided from the asset owner (ii) 2m or more from the base of the trunk of a street tree unless consent is provided from the tree owner for a lesser distance (iii) 6m or more from the tangent point of an intersection of 2 or more roads (iv) outside of the marked lines or infrastructure dedicating a pedestrian crossing.
PO 17.3 Driveways are designed to enable safe and convenient vehicle movements from the public road to on-site parking spaces.	**DTS/DPF 17.3** Driveways are designed and sited so that: (a) the gradient of the driveway does not exceed a grade of 1 in 4 and includes transitions to ensure a maximum grade change of 12.5% (1 in 8) for summit changes, and 15% (1 in 6.7) for sag changes, in accordance with AS 2890.1:2004 to prevent vehicles bottoming or scraping (b) the centreline of the driveway has an angle of no less than 70 degrees and no more than 110 degrees from the street boundary to which it takes its access as shown in the following diagram:

	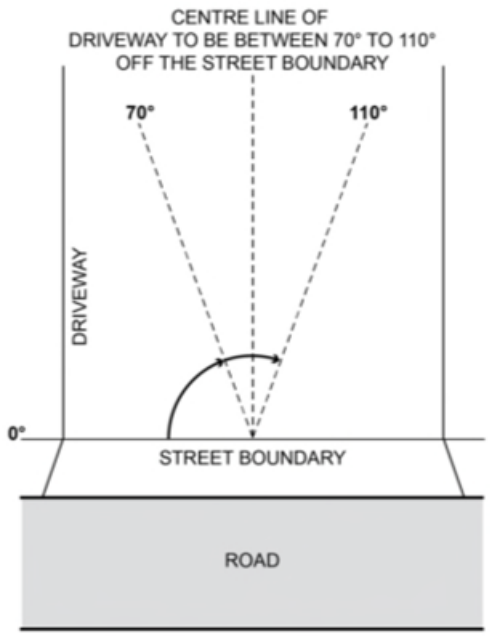 (c) if located to provide access from an alley, lane or right of way - the alley, land or right or way is at least 6.2m wide along the boundary of the allotment / site.
PO 17.4 Driveways and access points are designed and distributed to optimise the provision of on-street parking.	**DTS/DPF 17.4** Where on-street parking is available abutting the site's street frontage, on-street parking is retained in accordance with the following requirements: (a) minimum 0.33 on-street spaces per dwelling on the site (rounded up to the nearest whole number) (b) minimum car park length of 5.4m where a vehicle can enter or exit a space directly (c) minimum carpark length of 6m for an intermediate space located between two other parking spaces or to an end obstruction where the parking is indented.
PO 17.5 Residential driveways that service more than one dwelling of a dimension to allow safe and convenient movement.	**DTS/DPF 17.5** Driveways that service more than 1 dwelling or a dwelling on a battle-axe site: (a) have a minimum width of 3m (b) for driveways servicing more than 3 dwellings: (i) have a width of 5.5m or more and a length of 6m or more at the kerb of the primary street (ii) where the driveway length exceeds 30m, incorporate a passing point at least every 30 metres with a minimum width of 5.5m and a minimum length of 6m.
PO 17.6 Residential driveways that service more than one dwelling are designed to allow passenger vehicles to enter and exit the site and manoeuvre within the site in a safe and convenient manner.	**DTS/DPF 17.6** Driveways providing access to more than one dwelling, or a dwelling on a battle-axe site, allow a B85 passenger vehicle to enter and exit the garages or parking spaces in no more than a three-point turn manoeuvre
PO 17.7 Dwellings are adequately separated from common driveways and manoeuvring areas.	**DTS/DPF 17.7** Dwelling walls with entry doors or ground level habitable room windows are set back at least 1.5m from any driveway or area designated for the movement and manoeuvring of vehicles.
Storage	
PO 18.1 Dwellings are provided with sufficient and accessible space for storage to meet likely occupant needs.	**DTS/DPF 18.1** Dwellings are provided with storage at the following rates and 50% or more of the storage volume is provided within the dwelling: (a) studio: not less than $6m^3$ (b) 1 bedroom dwelling / apartment: not less than $8m^3$ (c) 2 bedroom dwelling / apartment: not less than $10m^3$ (d) 3+ bedroom dwelling / apartment: not less than $12m^3$.
Earthworks	
PO 19.1 Development, including any associated driveways and access tracks, minimises the need for earthworks to limit disturbance to natural topography.	**DTS/DPF 19.1** The development does not involve:

	(a) excavation exceeding a vertical height of 1m or (b) filling exceeding a vertical height of 1m or (c) a total combined excavation and filling vertical height exceeding 2m.
Service connections and infrastructure	
PO 20.1 Dwellings are provided with appropriate service connections and infrastructure.	DTS/DPF 20.1 The site and building: (a) have the ability to be connected to a permanent potable water supply (b) have the ability to be connected to a sewerage system, or a wastewater system approved under the *South Australian Public Health Act 2011* (c) have the ability to be connected to electricity supply (d) have the ability to be connected to an adequate water supply (and pressure) for fire-fighting purposes (e) would not be contrary to the Regulations prescribed for the purposes of Section 86 of the *Electricity Act 1996*.
Site contamination	
PO 21.1 Land that is suitable for sensitive land uses to provide a safe environment.	DTS/DPF 21.1 Development satisfies (a), (b), (c) or (d): (a) does not involve a change in the use of land (b) involves a change in the use of land that does not constitute a change to a more sensitive use (c) involves a change in the use of land to a more sensitive use on land at which site contamination does not exist (as demonstrated in a site contamination declaration form) (d) involves a change in the use of land to a more sensitive use on land at which site contamination exists, or may exist (as demonstrated in a site contamination declaration form), and satisfies both of the following: (i) a site contamination audit report has been prepared under Part 10A of the *Environment Protection Act 1993* in relation to the land within the previous 5 years which states that A. site contamination does not exist (or no longer exists) at the land or B. the land is suitable for the proposed use or range of uses (without the need for any further remediation) or C. where remediation is, or remains, necessary for the proposed use (or range of uses), remediation work has been carried out or will be carried out (and the applicant has provided a written undertaking that the remediation works will be implemented in association with the development) and (ii) no other class 1 activity or class 2 activity has taken place at the land since the preparation of the site contamination audit report (as demonstrated in a site contamination declaration form).

Infrastructure and Renewable Energy Facilities

Assessment Provisions (AP)

Desired Outcome (DO)

Desired Outcome	
DO 1	Efficient provision of infrastructure networks and services, renewable energy facilities and ancillary development in a manner that minimises hazard, is environmentally and culturally sensitive and manages adverse visual impacts on natural and rural landscapes and residential amenity.

Performance Outcomes (PO) and Deemed-to-Satisfy (DTS) Criteria / Designated Performance Feature (DPF)

Performance Outcome	Deemed-to-Satisfy Criteria / Designated Performance Feature
General	
PO 1.1 Development is located and designed to minimise hazard or nuisance to adjacent development and land uses.	DTS/DPF 1.1 None are applicable.
Visual Amenity	
PO 2.1 The visual impact of above-ground infrastructure networks and services (excluding high voltage transmission lines), renewable energy facilities (excluding wind farms), energy storage facilities and ancillary development is minimised from townships, scenic routes and public roads by: (a) utilising features of the natural landscape to obscure views where practicable (b) siting development below ridgelines where practicable	DTS/DPF 2.1 None are applicable.

Policy24	P&D Code (in effect) - Version 2023.13 - 31/08/2023
(c) avoiding visually sensitive and significant landscapes (d) using materials and finishes with low-reflectivity and colours that complement the surroundings (e) using existing vegetation to screen buildings (f) incorporating landscaping or landscaped mounding around the perimeter of a site and between adjacent allotments accommodating or zoned to primarily accommodate sensitive receivers.	
PO 2.2 Pumping stations, battery storage facilities, maintenance sheds and other ancillary structures incorporate vegetation buffers to reduce adverse visual impacts on adjacent land.	DTS/DPF 2.2 None are applicable.
PO 2.3 Surfaces exposed by earthworks associated with the installation of storage facilities, pipework, penstock, substations and other ancillary plant are reinstated and revegetated to reduce adverse visual impacts on adjacent land.	DTS/DPF 2.3 None are applicable.
Rehabilitation	
PO 3.1 Progressive rehabilitation (incorporating revegetation) of disturbed areas, ahead of or upon decommissioning of areas used for renewable energy facilities and transmission corridors.	DTS/DPF 3.1 None are applicable.
Hazard Management	
PO 4.1 Infrastructure and renewable energy facilities and ancillary development located and operated to not adversely impact maritime or air transport safety, including the operation of ports, airfields and landing strips.	DTS/DPF 4.1 None are applicable.
PO 4.2 Facilities for energy generation, power storage and transmission are separated as far as practicable from dwellings, tourist accommodation and frequently visited public places (such as viewing platforms / lookouts) to reduce risks to public safety from fire or equipment malfunction.	DTS/DPF 4.2 None are applicable.
PO 4.3 Bushfire hazard risk is minimised for renewable energy facilities by providing appropriate access tracks, safety equipment and water tanks and establishing cleared areas around substations, battery storage and operations compounds.	DTS/DPF 4.3 None are applicable.
Electricity Infrastructure and Battery Storage Facilities	
PO 5.1 Electricity infrastructure is located to minimise visual impacts through techniques including: (a) siting utilities and services: (i) on areas already cleared of native vegetation (ii) where there is minimal interference or disturbance to existing native vegetation or biodiversity (b) grouping utility buildings and structures with non-residential development, where practicable.	DTS/DPF 5.1 None are applicable.
PO 5.2 Electricity supply (excluding transmission lines) serving new development in urban areas and townships installed underground, excluding lines having a capacity exceeding or equal to 33kV.	DTS/DPF 5.2 None are applicable.
PO 5.3 Battery storage facilities are co-located with substation infrastructure where practicable to minimise the development footprint and reduce environmental impacts.	DTS/DPF 5.3 None are applicable.
Telecommunication Facilities	
PO 6.1 The proliferation of telecommunications facilities in the form of towers/monopoles in any one locality is managed, where technically feasible, by co-locating a facility with other communications facilities to mitigate impacts from clutter on visual amenity.	DTS/DPF 6.1 None are applicable.
PO 6.2 Telecommunications antennae are located as close as practicable to support structures to manage overall bulk and mitigate impacts on visual amenity.	DTS/DPF 6.2 None are applicable.

PO 6.3 Telecommunications facilities, particularly towers/monopoles, are located and sized to mitigate visual impacts by the following methods: (a) where technically feasible, incorporating the facility within an existing structure that may serve another purpose or all of the following: (b) using existing buildings and landscape features to obscure or interrupt views of a facility from nearby public roads, residential areas and places of high public amenity to the extent practical without unduly hindering the effective provision of telecommunications services (c) using materials and finishes that complement the environment (d) screening using landscaping and vegetation, particularly for equipment shelters and huts.	**DTS/DPF 6.3** None are applicable.
Renewable Energy Facilities	
PO 7.1 Renewable energy facilities are located as close as practicable to existing transmission infrastructure to facilitate connections and minimise environmental impacts as a result of extending transmission infrastructure.	**DTS/DPF 7.1** None are applicable.
Renewable Energy Facilities (Wind Farm)	
PO 8.1 Visual impact of wind turbine generators on the amenity of residential and tourist development is reduced through appropriate separation.	**DTS/DPF 8.1** Wind turbine generators are: (a) set back at least 2000m from the base of a turbine to any of the following zones: (i) Rural Settlement Zone (ii) Township Zone (iii) Rural Living Zone (iv) Rural Neighbourhood Zone with an additional 10m setback per additional metre over 150m overall turbine height (measured from the base of the turbine). (b) set back at least 1500m from the base of the turbine to non-associated (non-stakeholder) dwellings and tourist accommodation
PO 8.2 The visual impact of wind turbine generators on natural landscapes is managed by: (a) designing wind turbine generators to be uniform in colour, size and shape (b) coordinating blade rotation and direction (c) mounting wind turbine generators on tubular towers as opposed to lattice towers.	**DTS/DPF 8.2** None are applicable.
PO 8.3 Wind turbine generators and ancillary development minimise potential for bird and bat strike.	**DTS/DPF 8.3** None are applicable.
PO 8.4 Wind turbine generators incorporate recognition systems or physical markers to minimise the risk to aircraft operations.	**DTS/DPF 8.4** No Commonwealth air safety (CASA / ASA) or Defence requirement is applicable.
PO 8.5 Meteorological masts and guidewires are identifiable to aircraft through the use of colour bands, marker balls, high visibility sleeves or flashing strobes.	**DTS/DPF 8.5** None are applicable.
Renewable Energy Facilities (Solar Power)	
PO 9.1 Ground mounted solar power facilities generating 5MW or more are not located on land requiring the clearance of areas of intact native vegetation or on land of high environmental, scenic or cultural value.	**DTS/DPF 9.1** None are applicable.
PO 9.2 Ground mounted solar power facilities allow for movement of wildlife by: (a) incorporating wildlife corridors and habitat refuges (b) avoiding the use of extensive security or perimeter fencing or incorporating fencing that enables the passage of small animals without unreasonably compromising the security of the facility.	**DTS/DPF 9.2** None are applicable.
PO 9.3 Amenity impacts of solar power facilities are minimised through separation from conservation areas and sensitive receivers in other ownership.	**DTS/DPF 9.3** Ground mounted solar power facilities are set back from land boundaries, conservation areas and relevant zones in accordance with the following criteria:

Generation Capacity	Approximate size of array	Setback from adjoining land boundary	Setback from conservation areas	Setback from Township, Rural Settlement, Rural Neighbourhood and Rural Living Zones[1]
50MW>	80ha+	30m	500m	2km
10MW<50MW	16ha-<80ha	25m	500m	1.5km
5MW<10MW	8ha to <16ha	20m	500m	1km
1MW<5MW	1.6ha to <8ha	15m	500m	500m
100kW<1MW	0.5ha<1.6ha	10m	500m	100m
<100kW	<0.5ha	5m	500m	25m

Notes:

1. Does not apply when the site of the proposed ground mounted solar power facility is located within one of these zones.

PO 9.4 Ground mounted solar power facilities incorporate landscaping within setbacks from adjacent road frontages and boundaries of adjacent allotments accommodating non-host dwellings, where balanced with infrastructure access and bushfire safety considerations.	**DTS/DPF 9.4** None are applicable.
Hydropower / Pumped Hydropower Facilities	
PO 10.1 Hydropower / pumped hydropower facility storage is designed and operated to minimise the risk of storage dam failure.	**DTS/DPF 10.1** None are applicable.
PO 10.2 Hydropower / pumped hydropower facility storage is designed and operated to minimise water loss through increased evaporation or system leakage, with the incorporation of appropriate liners, dam covers, operational measures or detection systems.	**DTS/DPF 10.2** None are applicable.
PO 10.3 Hydropower / pumped hydropower facilities on existing or former mine sites minimise environmental impacts from site contamination, including from mine operations or water sources subject to such processes, now or in the future.	**DTS/DPF 10.3** None are applicable.
Water Supply	
PO 11.1 Development is connected to an appropriate water supply to meet the ongoing requirements of the intended use.	**DTS/DPF 11.1** Development is connected, or will be connected, to a reticulated water scheme or mains water supply with the capacity to meet the on-going requirements of the development.
PO 11.2 Dwellings are connected to a reticulated water scheme or mains water supply with the capacity to meet the requirements of the intended use. Where this is not available an appropriate rainwater tank or storage system for domestic use is provided.	**DTS/DPF 11.2** A dwelling is connected, or will be connected, to a reticulated water scheme or mains water supply with the capacity to meet the requirements of the development. Where this is not available it is serviced by a rainwater tank or tanks capable of holding at least 50,000 litres of water which is: (a) exclusively for domestic use (b) connected to the roof drainage system of the dwelling.
Wastewater Services	
PO 12.1 Development is connected to an approved common wastewater disposal service with the capacity to meet the requirements of the intended use. Where this is not available an appropriate on-site service is provided to meet the ongoing requirements of the intended use in accordance with the following: (a) it is wholly located and contained within the allotment of the development it will service (b) in areas where there is a high risk of contamination of surface, ground, or marine water resources from on-site disposal of liquid wastes, disposal systems are included to minimise the risk of pollution to those water resources (c) septic tank effluent drainage fields and other wastewater disposal areas are located away from watercourses and flood prone, sloping, saline or poorly drained land to minimise environmental harm.	**DTS/DPF 12.1** Development is connected, or will be connected, to an approved common wastewater disposal service with the capacity to meet the requirements of the development. Where this is not available it is instead capable of being serviced by an on-site waste water treatment system in accordance with the following: (a) the system is wholly located and contained within the allotment of development it will service; and (b) the system will comply with the requirements of the South Australian Public Health Act 2011.

PO 12.2 Effluent drainage fields and other wastewater disposal areas are maintained to ensure the effective operation of waste systems and minimise risks to human health and the environment.	DTS/DPF 12.2 Development is not built on, or encroaches within, an area that is, or will be, required for a sewerage system or waste control system.
Temporary Facilities	
PO 13.1 In rural and remote locations, development that is likely to generate significant waste material during construction, including packaging waste, makes provision for a temporary on-site waste storage enclosure to minimise the incidence of wind-blown litter.	DTS/DPF 13.1 A waste collection and disposal service is used to dispose of the volume of waste at the rate it is generated.
PO 13.2 Temporary facilities to support the establishment of renewable energy facilities (including borrow pits, concrete batching plants, laydown, storage, access roads and worker amenity areas) are sited and operated to minimise environmental impact.	DTS/DPF 13.2 None are applicable.

Intensive Animal Husbandry and Dairies

Assessment Provisions (AP)

Desired Outcome (DO)

Desired Outcome	
DO 1	Development of intensive animal husbandry and dairies in locations that are protected from encroachment by sensitive receivers and in a manner that minimises their adverse effects on amenity and the environment.

Performance Outcomes (PO) and Deemed-to-Satisfy (DTS) Criteria / Designated Performance Feature (DPF)

Performance Outcome	Deemed-to-Satisfy Criteria / Designated Performance Feature
Siting and Design	
PO 1.1 Intensive animal husbandry, dairies and associated activities are sited, designed, constructed and managed to not unreasonably impact on the environment or amenity of the locality.	DTS/DPF 1.1 None are applicable.
PO 1.2 Intensive animal husbandry, dairies and associated activities are sited, designed, constructed and managed to prevent the potential transmission of disease to other operations where animals are kept.	DTS/DPF 1.2 None are applicable.
PO 1.3 Intensive animal husbandry and associated activities such as wastewater lagoons and liquid/solid waste disposal areas are sited, designed, constructed and managed to not unreasonably impact on sensitive receivers in other ownership in terms of noise and air emissions.	DTS/DPF 1.3 None are applicable.
PO 1.4 Dairies and associated activities such as wastewater lagoons and liquid/solid waste disposal areas are sited, designed, constructed and managed to not unreasonably impact on sensitive receivers in other ownership in terms of noise and air emissions.	DTS/DPF 1.4 Dairies, associated wastewater lagoon(s) and liquid/solid waste storage and disposal facilities are located 500m or more from the nearest sensitive receiver in other ownership.
PO 1.5 Lagoons for the storage or treatment of milking shed effluent is adequately separated from roads to minimise impacts from odour on the general public.	DTS/DPF 1.5 Lagoons for the storage or treatment of milking shed effluent are set back 20m or more from public roads.
Waste	
PO 2.1	DTS/DPF 2.1

Storage of manure, used litter and other wastes (other than waste water lagoons) is sited, designed, constructed and managed to: (a) avoid attracting and harbouring vermin (b) avoid polluting water resources (c) be located outside 1% AEP flood event areas.	None are applicable.
Soil and Water Protection	
PO 3.1 To avoid environmental harm and adverse effects on water resources, intensive animal husbandry operations are appropriately set back from: (a) public water supply reservoirs (b) major watercourses (third order or higher stream) (c) any other watercourse, bore or well used for domestic or stock water supplies.	DTS/DPF 3.1 Intensive animal husbandry operations are set back: (a) 800m or more from a public water supply reservoir (b) 200m or more from a major watercourse (third order or higher stream) (c) 100m or more from any other watercourse, bore or well used for domestic or stock water supplies.
PO 3.2 Intensive animal husbandry operations and dairies incorporate appropriately designed effluent and run-off facilities that: (a) have sufficient capacity to hold effluent and runoff from the operations on site (b) ensure effluent does not infiltrate and pollute groundwater, soil or other water resources.	DTS/DPF 3.2 None are applicable.

Interface between Land Uses

Assessment Provisions (AP)

Desired Outcome (DO)

Desired Outcome	
DO 1	Development is located and designed to mitigate adverse effects on or from neighbouring and proximate land uses.

Performance Outcomes (PO) and Deemed-to-Satisfy (DTS) Criteria / Designated Performance Feature (DPF)

Performance Outcome	Deemed-to-Satisfy Criteria / Designated Performance Feature
General Land Use Compatibility	
PO 1.1 Sensitive receivers are designed and sited to protect residents and occupants from adverse impacts generated by lawfully existing land uses (or lawfully approved land uses) and land uses desired in the zone.	DTS/DPF 1.1 None are applicable.
PO 1.2 Development adjacent to a site containing a sensitive receiver (or lawfully approved sensitive receiver) or zone primarily intended to accommodate sensitive receivers is designed to minimise adverse impacts.	DTS/DPF 1.2 None are applicable.
Hours of Operation	
PO 2.1 Non-residential development does not unreasonably impact the amenity of sensitive receivers (or lawfully approved sensitive receivers) or an adjacent zone primarily for sensitive receivers through its hours of operation having regard to: (a) the nature of the development (b) measures to mitigate off-site impacts (c) the extent to which the development is desired in the zone (d) measures that might be taken in an adjacent zone primarily for sensitive receivers that mitigate adverse impacts without unreasonably compromising the intended use of that land.	DTS/DPF 2.1 Development operating within the following hours: **Class of Development** — **Hours of operation** Consulting room — 7am to 9pm, Monday to Friday; 8am to 5pm, Saturday Office — 7am to 9pm, Monday to Friday; 8am to 5pm, Saturday

	Shop, other than any one or combination of the following: (a) restaurant (b) cellar door in the Productive Rural Landscape Zone, Rural Zone or Rural Horticulture Zone	7am to 9pm, Monday to Friday 8am to 5pm, Saturday and Sunday

Overshadowing

PO 3.1 Overshadowing of habitable room windows of adjacent residential land uses in: a. a neighbourhood-type zone is minimised to maintain access to direct winter sunlight b. other zones is managed to enable access to direct winter sunlight.	**DTS/DPF 3.1** North-facing windows of habitable rooms of adjacent residential land uses in a neighbourhood-type zone receive at least 3 hours of direct sunlight between 9.00am and 3.00pm on 21 June.
PO 3.2 Overshadowing of the primary area of private open space or communal open space of adjacent residential land uses in: a. a neighbourhood type zone is minimised to maintain access to direct winter sunlight b. other zones is managed to enable access to direct winter sunlight.	**DTS/DPF 3.2** Development maintains 2 hours of direct sunlight between 9.00 am and 3.00 pm on 21 June to adjacent residential land uses in a neighbourhood-type zone in accordance with the following: a. for ground level private open space, the smaller of the following: i. half the existing ground level open space or ii. 35m2 of the existing ground level open space (with at least one of the area's dimensions measuring 2.5m) b. for ground level communal open space, at least half of the existing ground level open space.
PO 3.3 Development does not unduly reduce the generating capacity of adjacent rooftop solar energy facilities taking into account: (a) the form of development contemplated in the zone (b) the orientation of the solar energy facilities (c) the extent to which the solar energy facilities are already overshadowed.	**DTS/DPF 3.3** None are applicable.
PO 3.4 Development that incorporates moving parts, including windmills and wind farms, are located and operated to not cause unreasonable nuisance to nearby dwellings and tourist accommodation caused by shadow flicker.	**DTS/DPF 3.4** None are applicable.

Activities Generating Noise or Vibration

PO 4.1 Development that emits noise (other than music) does not unreasonably impact the amenity of sensitive receivers (or lawfully approved sensitive receivers).	**DTS/DPF 4.1** Noise that affects sensitive receivers achieves the relevant Environment Protection (Noise) Policy criteria.
PO 4.2 Areas for the on-site manoeuvring of service and delivery vehicles, plant and equipment, outdoor work spaces (and the like) are designed and sited to not unreasonably impact the amenity of adjacent sensitive receivers (or lawfully approved sensitive receivers) and zones primarily intended to accommodate sensitive receivers due to noise and vibration by adopting techniques including: (a) locating openings of buildings and associated services away from the interface with the adjacent sensitive receivers and zones primarily intended to accommodate sensitive receivers (b) when sited outdoors, locating such areas as far as practicable from adjacent sensitive receivers and zones primarily intended to accommodate sensitive receivers (c) housing plant and equipment within an enclosed structure or acoustic enclosure (d) providing a suitable acoustic barrier between the plant and / or equipment and the adjacent sensitive receiver boundary or zone.	**DTS/DPF 4.2** None are applicable.
PO 4.3 Fixed plant and equipment in the form of pumps and/or filtration systems for a swimming pool or spa are positioned and/or housed to not cause unreasonable noise nuisance to adjacent sensitive receivers (or lawfully approved sensitive receivers).	**DTS/DPF 4.3** The pump and/or filtration system ancillary to a dwelling erected on the same site is: (a) enclosed in a solid acoustic structure located at least 5m from the nearest habitable room located on an adjoining allotment or (b) located at least 12m from the nearest habitable room located on an adjoining allotment.
PO 4.4 External noise into bedrooms is minimised by separating or shielding these rooms from service equipment areas and fixed noise sources located on the same or an adjoining allotment.	**DTS/DPF 4.4** Adjacent land is used for residential purposes.
PO 4.5	**DTS/DPF 4.5**

Outdoor areas associated with licensed premises (such as beer gardens or dining areas) are designed and/or sited to not cause unreasonable noise impact on existing adjacent sensitive receivers (or lawfully approved sensitive receivers).	None are applicable.
PO 4.6 Development incorporating music achieves suitable acoustic amenity when measured at the boundary of an adjacent sensitive receiver (or lawfully approved sensitive receiver) or zone primarily intended to accommodate sensitive receivers.	**DTS/DPF 4.6** Development incorporating music includes noise attenuation measures that will achieve the following noise levels: **Assessment location**: Externally at the nearest existing or envisaged noise sensitive location **Music noise level**: Less than 8dB above the level of background noise ($L_{90,15min}$) in any octave band of the sound spectrum (LOCT10,15 < LOCT90,15 + 8dB)
Air Quality	
PO 5.1 Development with the potential to emit harmful or nuisance-generating air pollution incorporates air pollution control measures to prevent harm to human health or unreasonably impact the amenity of sensitive receivers (or lawfully approved sensitive receivers) within the locality and zones primarily intended to accommodate sensitive receivers.	**DTS/DPF 5.1** None are applicable.
PO 5.2 Development that includes chimneys or exhaust flues (including cafes, restaurants and fast food outlets) is designed to minimise nuisance or adverse health impacts to sensitive receivers (or lawfully approved sensitive receivers) by: (a) incorporating appropriate treatment technology before exhaust emissions are released (b) locating and designing chimneys or exhaust flues to maximise the dispersion of exhaust emissions, taking into account the location of sensitive receivers.	**DTS/DPF 5.2** None are applicable.
Light Spill	
PO 6.1 External lighting is positioned and designed to not cause unreasonable light spill impact on adjacent sensitive receivers (or lawfully approved sensitive receivers).	**DTS/DPF 6.1** None are applicable.
PO 6.2 External lighting is not hazardous to motorists and cyclists.	**DTS/DPF 6.2** None are applicable.
Solar Reflectivity / Glare	
PO 7.1 Development is designed and comprised of materials and finishes that do not unreasonably cause a distraction to adjacent road users and pedestrian areas or unreasonably cause heat loading and micro-climatic impacts on adjacent buildings and land uses as a result of reflective solar glare.	**DTS/DPF 7.1** None are applicable.
Electrical Interference	
PO 8.1 Development in rural and remote areas does not unreasonably diminish or result in the loss of existing communication services due to electrical interference.	**DTS/DPF 8.1** The building or structure: (a) is no greater than 10m in height, measured from existing ground level or (b) is not within a line of sight between a fixed transmitter and fixed receiver (antenna) other than where an alternative service is available via a different fixed transmitter or cable.
Interface with Rural Activities	
PO 9.1 Sensitive receivers are located and designed to mitigate impacts from lawfully existing horticultural and farming activities (or lawfully approved horticultural and farming activities), including spray drift and noise and do not prejudice the continued operation of these activities.	**DTS/DPF 9.1** None are applicable.
PO 9.2 Sensitive receivers are located and designed to mitigate potential impacts from lawfully existing intensive animal husbandry activities and do not prejudice the continued operation of these activities.	**DTS/DPF 9.2** None are applicable.
PO 9.3	**DTS/DPF 9.3**

Policy24	P&D Code (in effect) - Version 2023.13 - 31/08/2023
Sensitive receivers are located and designed to mitigate potential impacts from lawfully existing land-based aquaculture activities and do not prejudice the continued operation of these activities.	Sensitive receivers are located at least 200m from the boundary of a site used for land-based aquaculture and associated components in other ownership.
PO 9.4 Sensitive receivers are located and designed to mitigate potential impacts from lawfully existing dairies including associated wastewater lagoons and liquid/solid waste storage and disposal facilities and do not prejudice the continued operation of these activities.	**DTS/DPF 9.4** Sensitive receivers are sited at least 500m from the boundary of a site used for a dairy and associated wastewater lagoon(s) and liquid/solid waste storage and disposal facilities in other ownership.
PO 9.5 Sensitive receivers are located and designed to mitigate the potential impacts from lawfully existing facilities used for the handling, transportation and storage of bulk commodities (recognising the potential for extended hours of operation) and do not prejudice the continued operation of these activities.	**DTS/DPF 9.5** Sensitive receivers are located away from the boundary of a site used for the handling, transportation and/or storage of bulk commodities in other ownership in accordance with the following: (a) 300m or more, where it involves the handling of agricultural crop products, rock, ores, minerals, petroleum products or chemicals to or from any commercial storage facility (b) 300m or more, where it involves the handling of agricultural crop products, rock, ores, minerals, petroleum products or chemicals at a wharf or wharf side facility (including sea-port grain terminals) where the handling of these materials into or from vessels does not exceed 100 tonnes per day (c) 500m or more, where it involves the storage of bulk petroleum in individual containers with a capacity up to 200 litres and a total on-site storage capacity not exceeding 1000 cubic metres (d) 500m or more, where it involves the handling of coal with a capacity up to 1 tonne per day or a storage capacity up to 50 tonnes (e) 1000m or more, where it involves the handling of coal with a capacity exceeding 1 tonne per day but not exceeding 100 tonnes per day or a storage capacity exceeding 50 tonnes but not exceeding 5000 tonnes.
PO 9.6 Setbacks and vegetation plantings along allotment boundaries should be incorporated to mitigate the potential impacts of spray drift and other impacts associated with agricultural and horticultural activities.	**DTS/DPF 9.6** None are applicable.
PO 9.7 Urban development does not prejudice existing agricultural and horticultural activities through appropriate separation and design techniques.	**DTS/DPF 9.7** None are applicable.
Interface with Mines and Quarries (Rural and Remote Areas)	
PO 10.1 Sensitive receivers are separated from existing mines to minimise the adverse impacts from noise, dust and vibration.	**DTS/DPF 10.1** Sensitive receivers are located no closer than 500m from the boundary of a Mining Production Tenement under the *Mining Act 1971*.

Land Division

Assessment Provisions (AP)

Desired Outcome (DO)

Desired Outcome	
DO 1	Land division: (a) creates allotments with the appropriate dimensions and shape for their intended use (b) allows efficient provision of new infrastructure and the optimum use of underutilised infrastructure (c) integrates and allocates adequate and suitable land for the preservation of site features of value, including significant vegetation, watercourses, water bodies and other environmental features (d) facilitates solar access through allotment orientation (e) creates a compact urban form that supports active travel, walkability and the use of public transport (f) avoids areas of high natural hazard risk.

Performance Outcomes (PO) and Deemed-to-Satisfy (DTS) Criteria / Designated Performance Feature (DPF)

Performance Outcome	Deemed-to-Satisfy Criteria / Designated Performance Feature
All land division	
Allotment configuration	
PO 1.1 Land division creates allotments suitable for their intended use.	**DTS/DPF 1.1** Division of land satisfies (a) or (b):

	(a) reflects the site boundaries illustrated and approved in an operative or existing development authorisation for residential development under the *Development Act 1993* or *Planning, Development and Infrastructure Act 2016* where the allotments are used or are proposed to be used solely for residential purposes (b) is proposed as part of a combined land division application with deemed-to-satisfy dwellings on the proposed allotments.
PO 1.2 Land division considers the physical characteristics of the land, preservation of environmental and cultural features of value and the prevailing context of the locality.	**DTS/DPF 1.2** None are applicable.
Design and Layout	
PO 2.1 Land division results in a pattern of development that minimises the likelihood of future earthworks and retaining walls.	**DTS/DPF 2.1** None are applicable.
PO 2.2 Land division enables the appropriate management of interface impacts between potentially conflicting land uses and/or zones.	**DTS/DPF 2.2** None are applicable.
PO 2.3 Land division maximises the number of allotments that face public open space and public streets.	**DTS/DPF 2.3** None are applicable.
PO 2.4 Land division is integrated with site features, adjacent land uses, the existing transport network and available infrastructure.	**DTS/DPF 2.4** None are applicable.
PO 2.5 Development and infrastructure is provided and staged in a manner that supports an orderly and economic provision of land, infrastructure and services.	**DTS/DPF 2.5** None are applicable.
PO 2.6 Land division results in watercourses being retained within open space and development taking place on land not subject to flooding.	**DTS/DPF 2.6** None are applicable.
PO 2.7 Land division results in legible street patterns connected to the surrounding street network.	**DTS/DPF 2.7** None are applicable.
PO 2.8 Land division is designed to preserve existing vegetation of value including native vegetation and regulated and significant trees.	**DTS/DPF 2.8** None are applicable.
Roads and Access	
PO 3.1 Land division provides allotments with access to an all-weather public road.	**DTS/DPF 3.1** None are applicable.
PO 3.2 Street patterns and intersections are designed to enable the safe and efficient movement of pedestrian, cycle and vehicular traffic.	**DTS/DPF 3.2** None are applicable.
PO 3.3 Land division does not impede access to publicly owned open space and/or recreation facilities.	**DTS/DPF 3.3** None are applicable.
PO 3.4 Road reserves provide for safe and convenient movement and parking of projected volumes of vehicles and allow for the efficient movement of service and emergency vehicles.	**DTS/DPF 3.4** None are applicable.
PO 3.5 Road reserves are designed to accommodate pedestrian and cycling infrastructure, street tree planting, landscaping and street furniture.	**DTS/DPF 3.5** None are applicable.

PO 3.6 Road reserves accommodate stormwater drainage and public utilities.	**DTS/DPF 3.6** None are applicable.
PO 3.7 Road reserves provide unobstructed vehicular access and egress to and from individual allotments and sites.	**DTS/DPF 3.7** None are applicable.
PO 3.8 Roads, open space and thoroughfares provide safe and convenient linkages to the surrounding open space and transport network.	**DTS/DPF 3.8** None are applicable.
PO 3.9 Public streets are designed to enable tree planting to provide shade and enhance the amenity of streetscapes.	**DTS/DPF 3.9** None are applicable.
PO 3.10 Local streets are designed to create low-speed environments that are safe for cyclists and pedestrians.	**DTS/DPF 3.10** None are applicable.
Infrastructure	
PO 4.1 Land division incorporates public utility services within road reserves or dedicated easements.	**DTS/DPF 4.1** None are applicable.
PO 4.2 Waste water, sewage and other effluent is capable of being disposed of from each allotment without risk to public health or the environment.	**DTS/DPF 4.2** Each allotment can be connected to: **(a)** a waste water treatment plant that has the hydraulic volume and pollutant load treatment and disposal capacity for the maximum predicted wastewater volume generated by subsequent development of the proposed allotment or **(b)** a form of on-site waste water treatment and disposal that meets relevant public health and environmental standards.
PO 4.3 Septic tank effluent drainage fields and other waste water disposal areas are maintained to ensure the effective operation of waste systems and minimise risks to human health and the environment.	**DTS/DPF 4.3** Development is not built on, or encroaches within, an area that is or will be, required for a sewerage system or waste control system.
PO 4.4 Constructed wetland systems, including associated detention and retention basins, are sited and designed to ensure public health and safety is protected, including by minimising potential public health risks arising from the breeding of mosquitoes.	**DTS/DPF 4.4** None are applicable.
PO 4.5 Constructed wetland systems, including associated detention and retention basins, are sited and designed to allow sediments to settle prior to discharge into watercourses or the marine environment.	**DTS/DPF 4.5** None are applicable.
PO 4.6 Constructed wetland systems, including associated detention and retention basins, are sited and designed to function as a landscape feature.	**DTS/DPF 4.6** None are applicable.
Minor Land Division (Under 20 Allotments)	
Open Space	
PO 5.1 Land division proposing an additional allotment under 1 hectare provides or supports the provision of open space.	**DTS/DPF 5.1** None are applicable.
Solar Orientation	
PO 6.1 Land division for residential purposes facilitates solar access through allotment orientation.	**DTS/DPF 6.1** None are applicable.
Water Sensitive Design	

Policy24	P&D Code (in effect) - Version 2023.13 - 31/08/2023
PO 7.1 Land division creating a new road or common driveway includes stormwater management systems that minimise the discharge of sediment, suspended solids, organic matter, nutrients, bacteria, litter and other contaminants to the stormwater system, watercourses or other water bodies.	DTS/DPF 7.1 None are applicable.
PO 7.2 Land division designed to mitigate peak flows and manage the rate and duration of stormwater discharges from the site to ensure that the development does not increase the peak flows in downstream systems.	DTS/DPF 7.2 None are applicable.
Battle-Axe Development	
PO 8.1 Battle-axe development appropriately responds to the existing neighbourhood context.	DTS/DPF 8.1 Allotments are not in the form of a battle-axe arrangement.
PO 8.2 Battle-axe development designed to allow safe and convenient movement.	DTS/DPF 8.2 The handle of a battle-axe development: (a) has a minimum width of 4m or (b) where more than 3 allotments are proposed, a minimum width of 5.5m.
PO 8.3 Battle-axe allotments and/or common land are of a suitable size and dimension to allow passenger vehicles to enter and exit and manoeuvre within the site in a safe and convenient manner.	DTS/DPF 8.3 Battle-axe development allows a B85 passenger vehicle to enter and exit parking spaces in no more than a three-point turn manoeuvre.
PO 8.4 Battle-axe or common driveways incorporate landscaping and permeability to improve appearance and assist in stormwater management.	DTS/DPF 8.4 Battle-axe or common driveways satisfy (a) and (b): (a) are constructed of a minimum of 50% permeable or porous material (b) where the driveway is located directly adjacent the side or rear boundary of the site, soft landscaping with a minimum dimension of 1m is provided between the driveway and site boundary (excluding along the perimeter of a passing point).
Major Land Division (20+ Allotments)	
Open Space	
PO 9.1 Land division allocates or retains evenly distributed, high quality areas of open space to improve residential amenity and provide urban heat amelioration.	DTS/DPF 9.1 None are applicable.
PO 9.2 Land allocated for open space is suitable for its intended active and passive recreational use considering gradient and potential for inundation.	DTS/DPF 9.2 None are applicable.
PO 9.3 Land allocated for active recreation has dimensions capable of accommodating a range of active recreational activities.	DTS/DPF 9.3 None are applicable.
Water Sensitive Design	
PO 10.1 Land division creating 20 or more allotments includes a stormwater management system designed to mitigate peak flows and manage the rate and duration of stormwater discharges from the site to ensure that the development does not increase the peak flows in downstream systems.	DTS/DPF 10.1 None are applicable.
PO 10.2 Land division creating 20 or more allotments includes stormwater management systems that minimise the discharge of sediment, suspended solids, organic matter, nutrients, bacteria, litter and other contaminants to the stormwater system, watercourses or other water bodies.	DTS/DPF 10.2 None are applicable.
Solar Orientation	
PO 11.1 Land division creating 20 or more allotments for residential purposes facilitates solar access through allotment orientation and allotment dimensions.	DTS/DPF 11.1 None are applicable.

Marinas and On-Water Structures

Assessment Provisions (AP)

Desired Outcome (DO)

Desired Outcome	
DO 1	Marinas and on-water structures are located and designed to minimise the impairment of commercial, recreational and navigational activities and adverse impacts on the environment.

Performance Outcomes (PO) and Deemed-to-Satisfy (DTS) Criteria / Designated Performance Feature (DPF)

Performance Outcome	Deemed-to-Satisfy Criteria / Designated Performance Feature
Navigation and Safety	
PO 1.1 Safe public access is provided or maintained to the waterfront, public infrastructure and recreation areas.	**DTS/DPF 1.1** None are applicable.
PO 1.2 The operation of wharves is not impaired by marinas and on-water structures.	**DTS/DPF 1.2** None are applicable.
PO 1.3 Navigation and access channels are not impaired by marinas and on-water structures.	**DTS/DPF 1.3** None are applicable.
PO 1.4 Commercial shipping lanes are not impaired by marinas and on-water structures.	**DTS/DPF 1.4** Marinas and on-water structures are set back 250m or more from commercial shipping lanes.
PO 1.5 Marinas and on-water structures are located to avoid interfering with the operation or function of a water supply pumping station.	**DTS/DPF 1.5** On-water structures are set back: (a) 3km or more from upstream water supply pumping station take-off points (b) 500m or more from downstream water supply pumping station take-off points.
PO 1.6 Maintenance of on-water infrastructure, including revetment walls, is not impaired by marinas and on-water structures.	**DTS/DPF 1.6** None are applicable.
Environmental Protection	
PO 2.1 Development is sited and designed to facilitate water circulation and exchange.	**DTS/DPF 2.1** None are applicable.

Open Space and Recreation

Assessment Provisions (AP)

Desired Outcome (DO)

Desired Outcome	
DO 1	Pleasant, functional and accessible open space and recreation facilities are provided at State, regional, district, neighbourhood and local levels for active and passive recreation, biodiversity, community health, urban cooling, tree canopy cover, visual amenity, gathering spaces, wildlife and waterway corridors, and a range of other functions and at a range of sizes that reflect the purpose of that open space.

Performance Outcome	Deemed-to-Satisfy Criteria / Designated Performance Feature
Land Use and Intensity	
PO 1.1 Recreation facilities are compatible with surrounding land uses and activities.	**DTS/DPF 1.1** None are applicable.
PO 1.2 Open space areas include natural or landscaped areas using locally indigenous plant species and large trees.	**DTS/DPF 1.2** None are applicable.
Design and Siting	
PO 2.1 Open space and recreation facilities address adjacent public roads to optimise pedestrian access and visibility.	**DTS/DPF 2.1** None are applicable.
PO 2.2 Open space and recreation facilities incorporate park furniture, shaded areas and resting places.	**DTS/DPF 2.2** None are applicable.
PO 2.3 Open space and recreation facilities link habitats, wildlife corridors and existing open spaces and recreation facilities.	**DTS/DPF 2.3** None are applicable.
Pedestrians and Cyclists	
PO 3.1 Open space incorporates: (a) pedestrian and cycle linkages to other open spaces, centres, schools and public transport nodes; (b) safe crossing points where pedestrian routes intersect the road network; (c) easily identified access points.	**DTS/DPF 3.1** None are applicable.
Stability	
PO 4.1 Land allocated for open space is suitable for its intended active and passive recreational use taking into consideration its gradient and potential for inundation.	**DTS/DPF 4.1** None are applicable.
Safety and Security	
PO 5.1 Open space is overlooked by housing, commercial or other development to provide casual surveillance where possible.	**DTS/DPF 5.1** None are applicable.
PO 5.2 Play equipment is located to maximise opportunities for passive surveillance.	**DTS/DPF 5.2** None are applicable.
PO 5.3 Landscaping provided in open space and recreation facilities maximises opportunities for casual surveillance throughout the park.	**DTS/DPF 5.3** None are applicable.
PO 5.4 Fenced parks and playgrounds have more than one entrance or exit to minimise potential entrapment.	**DTS/DPF 5.4** None are applicable.
PO 5.5 Adequate lighting is provided around toilets, telephones, seating, litter bins, bicycle storage, car parks and other such facilities.	**DTS/DPF 5.5** None are applicable.
PO 5.6	**DTS/DPF 5.6**

Pedestrian and bicycle movement after dark is focused along clearly defined, adequately lit routes with observable entries and exits.	None are applicable.
Signage	
PO 6.1 Signage is provided at entrances to and within the open space and recreation facilities to provide clear orientation to major points of interest such as the location of public toilets, telephones, safe routes, park activities and the like.	DTS/DPF 6.1 None are applicable.
Buildings and Structures	
PO 7.1 Buildings and car parking areas in open space areas are designed, located and of a scale to be unobtrusive.	DTS/DPF 7.1 None are applicable.
PO 7.2 Buildings and structures in open space areas are clustered where practical to ensure that the majority of the site remains open.	DTS/DPF 7.2 None are applicable.
PO 7.3 Development in open space is constructed to minimise the extent of impervious surfaces.	DTS/DPF 7.3 None are applicable.
PO 7.4 Development that abuts or includes a coastal reserve or Crown land used for scenic, conservation or recreational purposes is located and designed to have regard to the purpose, management and amenity of the reserve.	DTS/DPF 7.4 None are applicable.
Landscaping	
PO 8.1 Open space and recreation facilities provide for the planting and retention of large trees and vegetation.	DTS/DPF 8.1 None are applicable.
PO 8.2 Landscaping in open space and recreation facilities provides shade and windbreaks: (a) along cyclist and pedestrian routes; (b) around picnic and barbecue areas; (c) in car parking areas.	DTS/DPF 8.2 None are applicable.
PO 8.3 Landscaping in open space facilitates habitat for local fauna and facilitates biodiversity.	DTS/DPF 8.3 None are applicable.
PO 8.4 Landscaping including trees and other vegetation passively watered with local rainfall run-off, where practicable.	DTS/DPF 8.4 None are applicable.

Out of Activity Centre Development

Assessment Provisions (AP)

Desired Outcome (DO)

Desired Outcome	
DO1	The role of Activity Centres in contributing to the form and pattern of development and enabling equitable and convenient access to a range of shopping, administrative, cultural, entertainment and other facilities in a single trip is maintained and reinforced.

Performance Outcomes and Deemed to Satisfy / Designated Performance Outcome Criteria

Performance Outcome	Deemed-to-Satisfy Criteria / Designated Performance Feature
PO 1.1 Non-residential development outside Activity Centres of a scale and type that does not diminish the	DTS/DPF 1.1 None are applicable.

role of Activity Centres: (a) as primary locations for shopping, administrative, cultural, entertainment and community services (b) as a focus for regular social and business gatherings (c) in contributing to or maintaining a pattern of development that supports equitable community access to services and facilities.	
PO 1.2 Out-of-activity centre non-residential development complements Activity Centres through the provision of services and facilities: (a) that support the needs of local residents and workers, particularly in underserviced locations (b) at the edge of Activities Centres where they cannot readily be accommodated within an existing Activity Centre to expand the range of services on offer and support the role of the Activity Centre.	DTS/DPF 1.2 None are applicable.

Resource Extraction

Assessment Provisions (AP)

Desired Outcome (DO)

Desired Outcome	
DO 1	Resource extraction activities are developed in a manner that minimises human and environmental impacts.

Performance Outcomes (PO) and Deemed-to-Satisfy (DTS) Criteria / Designated Performance Feature (DPF)

Performance Outcome	Deemed-to-Satisfy Criteria / Designated Performance Feature
Land Use and Intensity	
PO 1.1 Resource extraction activities minimise landscape damage outside of those areas unavoidably disturbed to access and exploit a resource and provide for the progressive reclamation and betterment of disturbed areas.	DTS/DPF 1.1 None are applicable.
PO 1.2 Resource extraction activities avoid damage to cultural sites or artefacts.	DTS/DPF 1.2 None are applicable.
Water Quality	
PO 2.1 Stormwater and/or wastewater from resource extraction activities is diverted into appropriately sized treatment and retention systems to enable reuse on site.	DTS/DPF 2.1 None are applicable.
Separation Treatments, Buffers and Landscaping	
PO 3.1 Resource extraction activities minimise adverse impacts upon sensitive receivers through incorporation of separation distances and/or mounding/vegetation.	DTS/DPF 3.1 None are applicable.
PO 3.2 Resource extraction activities are screened from view from adjacent land by perimeter landscaping and/or mounding.	DTS/DPF 3.2 None are applicable.

Site Contamination

Assessment Provisions (AP)

Desired Outcome (DO)

Desired Outcome	
DO 1	Ensure land is suitable for the proposed use in circumstances where it is, or may have been, subject to site contamination.

Performance Outcomes (PO) and Deemed-to-Satisfy (DTS) Criteria / Designated Performance Feature (DPF)

Performance Outcome	Deemed-to-Satisfy Criteria / Designated Performance Feature
PO 1.1 Ensure land is suitable for use when land use changes to a more sensitive use.	**DTS/DPF 1.1** Development satisfies (a), (b), (c) or (d): **(a)** does not involve a change in the use of land **(b)** involves a change in the use of land that does not constitute a change to a more sensitive use **(c)** involves a change in the use of land to a more sensitive use on land at which site contamination is unlikely to exist (as demonstrated in a site contamination declaration form) **(d)** involves a change in the use of land to a more sensitive use on land at which site contamination exists, or may exist (as demonstrated in a site contamination declaration form), and satisfies both of the following: **(i)** a site contamination audit report has been prepared under Part 10A of the *Environment Protection Act 1993* in relation to the land within the previous 5 years which states that:- **A.** site contamination does not exist (or no longer exists) at the land or **B.** the land is suitable for the proposed use or range of uses (without the need for any further remediation) or **C.** where remediation is, or remains, necessary for the proposed use (or range of uses), remediation work has been carried out or will be carried out (and the applicant has provided a written undertaking that the remediation works will be implemented in association with the development) and **(ii)** no other class 1 activity or class 2 activity has taken place at the land since the preparation of the site contamination audit report (as demonstrated in a site contamination declaration form).

Tourism Development

Assessment Provisions (AP)

Desired Outcome (DO)

Desired Outcome	
DO 1	Tourism development is built in locations that cater to the needs of visitors and positively contributes to South Australia's visitor economy.

Performance Outcomes (PO) and Deemed-to-Satisfy (DTS) Criteria / Designated Performance Feature (DPF)

Performance Outcome	Deemed-to-Satisfy Criteria / Designated Performance Feature
General	
PO 1.1 Tourism development complements and contributes to local, natural, cultural or historical context where: **(a)** it supports immersive natural experiences **(b)** it showcases South Australia's landscapes and produce **(c)** its events and functions are connected to local food, wine and nature.	**DTS/DPF 1.1** None are applicable.
PO 1.2 Tourism development comprising multiple accommodation units (including any facilities and activities for use by guests and visitors) is clustered to minimise environmental and contextual impact.	**DTS/DPF 1.2** None are applicable.
Caravan and Tourist Parks	
PO 2.1 Potential conflicts between long-term residents and short-term tourists are minimised through suitable siting and design measures.	**DTS/DPF 2.1** None are applicable.

Policy24	P&D Code (in effect) - Version 2023.13 - 31/08/2023
PO 2.2 Occupants are provided privacy and amenity through landscaping and fencing.	DTS/DPF 2.2 None are applicable.
PO 2.3 Communal open space and centrally located recreation facilities are provided for guests and visitors.	DTS/DPF 2.3 12.5% or more of a caravan park comprises clearly defined communal open space, landscaped areas and areas for recreation.
PO 2.4 Perimeter landscaping is used to enhance the amenity of the locality.	DTS/DPF 2.4 None are applicable.
PO 2.5 Amenity blocks (showers, toilets, laundry and kitchen facilities) are sufficient to serve the full occupancy of the development.	DTS/DPF 2.5 None are applicable.
PO 2.6 Long-term occupation does not displace tourist accommodation, particularly in important tourist destinations such as coastal and riverine locations.	DTS/DPF 2.6 None are applicable.
Tourist accommodation in areas constituted under the National Parks and Wildlife Act 1972	
PO 3.1 Tourist accommodation avoids delicate or environmentally sensitive areas such as sand dunes, cliff tops, estuaries, wetlands or substantially intact strata of native vegetation (including regenerated areas of native vegetation lost through bushfire).	DTS/DPF 3.1 None are applicable.
PO 3.2 Tourist accommodation is sited and designed in a manner that is subservient to the natural environment and where adverse impacts on natural features, landscapes, habitats and cultural assets are avoided.	DTS/DPF 3.2 None are applicable.
PO 3.3 Tourist accommodation and recreational facilities, including associated access ways and ancillary structures, are located on cleared (other than where cleared as a result of bushfire) or degraded areas or where environmental improvements can be achieved.	DTS/DPF 3.3 None are applicable.
PO 3.4 Tourist accommodation is designed to prevent conversion to private dwellings through: (a) comprising a minimum of 10 accommodation units (b) clustering separated individual accommodation units (c) being of a size unsuitable for a private dwelling (d) ensuring functional areas that are generally associated with a private dwelling such as kitchens and laundries are excluded from, or physically separated from individual accommodation units, or are of a size unsuitable for a private dwelling.	DTS/DPF 3.4 None are applicable.

Transport, Access and Parking

Assessment Provisions (AP)

Desired Outcome (DO)

Desired Outcome	
DO 1	A comprehensive, integrated and connected transport system that is safe, sustainable, efficient, convenient and accessible to all users.

Performance Outcomes (PO) and Deemed-to-Satisfy (DTS) Criteria / Designated Performance Feature (DPF)

Performance Outcome	Deemed-to-Satisfy Criteria / Designated Performance Feature
Movement Systems	

Policy24	P&D Code (in effect) - Version 2023.13 - 31/08/2023
PO 1.1 Development is integrated with the existing transport system and designed to minimise its potential impact on the functional performance of the transport system.	**DTS/DPF 1.1** None are applicable.
PO 1.2 Development is designed to discourage commercial and industrial vehicle movements through residential streets and adjacent other sensitive receivers.	**DTS/DPF 1.2** None are applicable.
PO 1.3 Industrial, commercial and service vehicle movements, loading areas and designated parking spaces are separated from passenger vehicle car parking areas to ensure efficient and safe movement and minimise potential conflict.	**DTS/DPF 1.3** None are applicable.
PO 1.4 Development is sited and designed so that loading, unloading and turning of all traffic avoids interrupting the operation of and queuing on public roads and pedestrian paths.	**DTS/DPF 1.4** All vehicle manoeuvring occurs onsite.
Sightlines	
PO 2.1 Sightlines at intersections, pedestrian and cycle crossings, and crossovers to allotments for motorists, cyclists and pedestrians are maintained or enhanced to ensure safety for all road users and pedestrians.	**DTS/DPF 2.1** None are applicable.
PO 2.2 Walls, fencing and landscaping adjacent to driveways and corner sites are designed to provide adequate sightlines between vehicles and pedestrians.	**DTS/DPF 2.2** None are applicable.
Vehicle Access	
PO 3.1 Safe and convenient access minimises impact or interruption on the operation of public roads.	**DTS/DPF 3.1** The access is: **(a)** provided via a lawfully existing or authorised driveway or access point or an access point for which consent has been granted as part of an application for the division of land or **(b)** not located within 6m of an intersection of 2 or more roads or a pedestrian activated crossing.
PO 3.2 Development incorporating vehicular access ramps ensures vehicles can enter and exit a site safely and without creating a hazard to pedestrians and other vehicular traffic.	**DTS/DPF 3.2** None are applicable.
PO 3.3 Access points are sited and designed to accommodate the type and volume of traffic likely to be generated by the development or land use.	**DTS/DPF 3.3** None are applicable.
PO 3.4 Access points are sited and designed to minimise any adverse impacts on neighbouring properties.	**DTS/DPF 3.4** None are applicable.
PO 3.5 Access points are located so as not to interfere with street trees, existing street furniture (including directional signs, lighting, seating and weather shelters) or infrastructure services to maintain the appearance of the streetscape, preserve local amenity and minimise disruption to utility infrastructure assets.	**DTS/DPF 3.5** Vehicle access to designated car parking spaces satisfy (a) or (b): **(a)** is provided via a lawfully existing or authorised access point or an access point for which consent has been granted as part of an application for the division of land **(b)** where newly proposed, is set back: **(i)** 0.5m or more from any street furniture, street pole, infrastructure services pit, or other stormwater or utility infrastructure unless consent is provided from the asset owner **(ii)** 2m or more from the base of the trunk of a street tree unless consent is provided from the tree owner for a lesser distance **(iii)** 6m or more from the tangent point of an intersection of 2 or more roads **(iv)** outside of the marked lines or infrastructure dedicating a pedestrian crossing.
PO 3.6 Driveways and access points are separated and minimised in number to optimise the provision of on-street visitor parking (where on-street parking is appropriate).	**DTS/DPF 3.6** Driveways and access points: **(a)** for sites with a frontage to a public road of 20m or less, one access point no greater than 3.5m in width is provided **(b)** for sites with a frontage to a public road greater than 20m: **(i)** a single access point no greater than 6m in width is provided or

	(ii) not more than two access points with a width of 3.5m each are provided.
PO 3.7 Access points are appropriately separated from level crossings to avoid interference and ensure their safe ongoing operation.	**DTS/DPF 3.7** Development does not involve a new or modified access or cause an increase in traffic through an existing access that is located within the following distance from a railway crossing: (a) 80 km/h road - 110m (b) 70 km/h road - 90m (c) 60 km/h road - 70m (d) 50km/h or less road - 50m.
PO 3.8 Driveways, access points, access tracks and parking areas are designed and constructed to allow adequate movement and manoeuvrability having regard to the types of vehicles that are reasonably anticipated.	**DTS/DPF 3.8** None are applicable.
PO 3.9 Development is designed to ensure vehicle circulation between activity areas occurs within the site without the need to use public roads.	**DTS/DPF 3.9** None are applicable.
Access for People with Disabilities	
PO 4.1 Development is sited and designed to provide safe, dignified and convenient access for people with a disability.	**DTS/DPF 4.1** None are applicable.
Vehicle Parking Rates	
PO 5.1 Sufficient on-site vehicle parking and specifically marked accessible car parking places are provided to meet the needs of the development or land use having regard to factors that may support a reduced on-site rate such as: (a) availability of on-street car parking (b) shared use of other parking areas (c) in relation to a mixed-use development, where the hours of operation of commercial activities complement the residential use of the site, the provision of vehicle parking may be shared (d) the adaptive reuse of a State or Local Heritage Place.	**DTS/DPF 5.1** Development provides a number of car parking spaces on-site at a rate no less than the amount calculated using one of the following, whichever is relevant: (a) Transport, Access and Parking Table 2 - Off-Street Vehicle Parking Requirements in Designated Areas if the development is a class of development listed in Table 2 and the site is in a Designated Area (b) Transport, Access and Parking Table 1 - General Off-Street Car Parking Requirements where (a) does not apply (c) if located in an area where a lawfully established carparking fund operates, the number of spaces calculated under (a) or (b) less the number of spaces offset by contribution to the fund.
Vehicle Parking Areas	
PO 6.1 Vehicle parking areas are sited and designed to minimise impact on the operation of public roads by avoiding the use of public roads when moving from one part of a parking area to another.	**DTS/DPF 6.1** Movement between vehicle parking areas within the site can occur without the need to use a public road.
PO 6.2 Vehicle parking areas are appropriately located, designed and constructed to minimise impacts on adjacent sensitive receivers through measures such as ensuring they are attractively developed and landscaped, screen fenced, and the like.	**DTS/DPF 6.2** None are applicable.
PO 6.3 Vehicle parking areas are designed to provide opportunity for integration and shared-use of adjacent car parking areas to reduce the total extent of vehicle parking areas and access points.	**DTS/DPF 6.3** None are applicable.
PO 6.4 Pedestrian linkages between parking areas and the development are provided and are safe and convenient.	**DTS/DPF 6.4** None are applicable.
PO 6.5 Vehicle parking areas that are likely to be used during non-daylight hours are provided with sufficient lighting to entry and exit points to ensure clear visibility to users.	**DTS/DPF 6.5** None are applicable.
PO 6.6 Loading areas and designated parking spaces for service vehicles are provided within the boundary of the site.	**DTS/DPF 6.6** Loading areas and designated parking spaces are wholly located within the site.

PO 6.7 On-site visitor parking spaces are sited and designed to be accessible to all visitors at all times.	**DTS/DPF 6.7** None are applicable.
Undercroft and Below Ground Garaging and Parking of Vehicles	
PO 7.1 Undercroft and below ground garaging of vehicles is designed to enable safe entry and exit from the site without compromising pedestrian or cyclist safety or causing conflict with other vehicles.	**DTS/DPF 7.1** None are applicable.
Internal Roads and Parking Areas in Residential Parks and Caravan and Tourist Parks	
PO 8.1 Internal road and vehicle parking areas are surfaced to prevent dust becoming a nuisance to park residents and occupants.	**DTS/DPF 8.1** None are applicable.
PO 8.2 Traffic circulation and movement within the park is pedestrian friendly and promotes low speed vehicle movement.	**DTS/DPF 8.2** None are applicable.
Bicycle Parking in Designated Areas	
PO 9.1 The provision of adequately sized on-site bicycle parking facilities encourages cycling as an active transport mode.	**DTS/DPF 9.1** Areas and / or fixtures are provided for the parking and storage of bicycles at a rate not less than the amount calculated using Transport, Access and Parking Table 3 - Off Street Bicycle Parking Requirements.
PO 9.2 Bicycle parking facilities provide for the secure storage and tethering of bicycles in a place where casual surveillance is possible, is well lit and signed for the safety and convenience of cyclists and deters property theft.	**DTS/DPF 9.2** None are applicable.
PO 9.3 Non-residential development incorporates end-of-journey facilities for employees such as showers, changing facilities and secure lockers, and signage indicating the location of the facilities to encourage cycling as a mode of journey-to-work transport.	**DTS/DPF 9.3** None are applicable.
Corner Cut-Offs	
PO 10.1 Development is located and designed to ensure drivers can safely turn into and out of public road junctions.	**DTS/DPF 10.1** Development does not involve building work, or building work is located wholly outside the land shown as Corner Cut-Off Area in the following diagram: 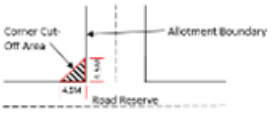
Heavy Vehicle Parking	
PO 11.1 Heavy vehicle parking and access is designed and sited so that the activity does not result in nuisance to adjoining neighbours as a result of dust, fumes, vibration, odour or potentially hazardous loads.	**DTS/DPF 11.1** Heavy vehicle parking occurs in accordance with the following: (a) the site is not located within a Neighbourhood-type zone (except a Rural Living Zone) (b) the site is a minimum of 0.4 ha (c) where the site is 2 ha or more, no more than 2 vehicles exceeding 3,000 kilograms each (and trailers) are to be parked on the allotment at any time (d) where the site is between 0.4 ha and 2 ha, only one vehicle exceeding 3,000 kilograms (and one trailer) are to be parking on the allotment at any time (e) the vehicle parking area achieves the following setbacks: (i) behind the building line or 30m, whichever is greater (ii) 20m from the secondary street if it is a State Maintained Road (iii) 10m from the secondary street if it is a local road (iv) 10m from side and rear boundaries (f) parking and access areas (including internal driveways) should be sealed or have a surface that can be treated and maintained to minimise dust and mud nuisance (g) does not include refrigerated trailers or vehicles (h) vehicles only enter and exit the property in accordance with the following hours: (i) Monday to Saturday 6:00am and 9:30pm (ii) Sunday and public holidays between 9:30 am and 7:00 pm

Policy24	P&D Code (in effect) - Version 2023.13 - 31/08/2023
	(i) the handling or trans-shipment of freight is not carried out on the property.
PO 11.2 Heavy vehicle parking ensures that vehicles can enter and exit a site safely and without creating a hazard to pedestrians and other vehicular traffic.	DTS/DPF 11.2 Heavy vehicles: (a) can enter and exit the site in a forward direction; and (b) operate within the statutory mass and dimension limited for General Access Vehicles (as prescribed by the National Heavy Vehicle Regulator).
PO 11.3 Heavy vehicle parking is screened through siting behind buildings, screening, landscaping or the like to obscure views from adjoining properties and public roads.	DTS/DPF 11.3 None are applicable.

Table 1 - General Off-Street Car Parking Requirements

The following parking rates apply and if located in an area where a lawfully established carparking fund operates, the number of spaces is reduced by an amount equal to the number of spaces offset by contribution to the fund.

Class of Development	Car Parking Rate (unless varied by Table 2 onwards) Where a development comprises more than one development type, then the overall car parking rate will be taken to be the sum of the car parking rates for each development type.
Residential Development	
Detached Dwelling	Dwelling with 1 bedroom (including rooms capable of being used as a bedroom) - 1 space per dwelling. Dwelling with 2 or more bedrooms (including rooms capable of being used as a bedroom) - 2 spaces per dwelling, 1 of which is to be covered.
Group Dwelling	Dwelling with 1 or 2 bedrooms (including rooms capable of being used as a bedroom) - 1 space per dwelling. Dwelling with 3 or more bedrooms (including rooms capable of being used as a bedroom) - 2 spaces per dwelling, 1 of which is to be covered. 0.33 spaces per dwelling for visitor parking where development involves 3 or more dwellings.
Residential Flat Building	Dwelling with 1 or 2 bedrooms (including rooms capable of being used as a bedroom) - 1 space per dwelling. Dwelling with 3 or more bedrooms (including rooms capable of being used as a bedroom) - 2 spaces per dwelling, 1 of which is to be covered. 0.33 spaces per dwelling for visitor parking where development involves 3 or more dwellings.
Row Dwelling where vehicle access is from the primary street	Dwelling with 1 bedroom (including rooms capable of being used as a bedroom) - 1 space per dwelling. Dwelling with 2 or more bedrooms (including rooms capable of being used as a bedroom) - 2 spaces per dwelling, 1 of which is to be covered.
Row Dwelling where vehicle access is not from the primary street (i.e. rear-loaded)	Dwelling with 1 or 2 bedrooms (including rooms capable of being used as a bedroom) - 1 space per dwelling. Dwelling with 3 or more bedrooms (including rooms capable of being used as a bedroom) - 2 spaces per dwelling, 1 of which is to be covered.
Semi-Detached Dwelling	Dwelling with 1 bedroom (including rooms capable of being used as a bedroom) - 1 space per dwelling. Dwelling with 2 or more bedrooms (including rooms capable of being used as a bedroom) - 2 spaces per dwelling, 1 of which is to be covered.
Aged / Supported Accommodation	
Retirement facility	Dwelling with 1 or 2 bedrooms (including rooms capable of being used as a bedroom) - 1 space per dwelling. Dwelling with 3 or more bedrooms (including rooms capable of being used as a bedroom) - 2 spaces per dwelling. 0.2 spaces per dwelling for visitor parking.
Supported accommodation	0.3 spaces per bed.
Residential Development (Other)	
Ancillary accommodation	No additional requirements beyond those associated with the main dwelling.
Residential park	Dwelling with 1 or 2 bedrooms (including rooms capable of being used as a bedroom) - 1 space per dwelling. Dwelling with 3 or more bedrooms (including rooms capable of being used as a bedroom) - 2 spaces per dwelling. 0.2 spaces per dwelling for visitor parking.
Student accommodation	0.3 spaces per bed.
Workers' accommodation	0.5 spaces per bed plus 0.2 spaces per bed for visitor parking.
Tourist	
Caravan and tourist park	Parks with 100 sites or less - a minimum of 1 space per 10 sites to be used for accommodation. Parks with more than 100 sites - a minimum of 1 space per 15 sites used for accommodation. A minimum of 1 space for every caravan (permanently fixed to the ground) or cabin.
Tourist accommodation other than a caravan and tourist park	1 car parking space per accommodation unit / guest room.
Commercial Uses	
Auction rooms' depot	1 space per 100m2 of building floor area plus an additional 2 spaces.
Automotive collision repair	3 spaces per service bay.
Motor repair station	3 spaces per service bay.
Office	For a call centre, 8 spaces per 100m2 of gross leasable floor area In all other cases, 4 spaces per 100m2 of gross leasable floor area.
Retail fuel outlet	3 spaces per 100m2 gross leasable floor area.
Service trade premises	2.5 spaces per 100m2 of gross leasable floor area 1 space per 100m2 of outdoor area used for display purposes.
Shop (no commercial kitchen)	5.5 spaces per 100m2 of gross leasable floor area where not located in an integrated complex containing two or more tenancies (and which may comprise more than one building) where facilities for off-street vehicle parking, vehicle loading and unloading, and the storage and collection of refuse are shared.

	5 spaces per 100m2 of gross leasable floor area where located in an integrated complex containing two or more tenancies (and which may comprise more than one building) where facilities for off-street vehicle parking, vehicle loading and unloading, and the storage and collection of refuse are shared.
Shop (in the form of a bulky goods outlet)	2.5 spaces per 100m2 of gross leasable floor area.
Shop (in the form of a restaurant or involving a commercial kitchen)	Premises with a dine-in service only (which may include a take-away component with no drive-through) - 0.4 spaces per seat. Premises with take-away service but with no seats - 12 spaces per 100m2 of total floor area plus a drive-through queue capacity of ten vehicles measured from the pick-up point. Premises with a dine-in and drive-through take-away service - 0.3 spaces per seat plus a drive through queue capacity of 10 vehicles measured from the pick-up point.
Community and Civic Uses	
Community facility	For a library, 4 spaces per 100m2 of total floor area. For a hall/meeting hall, 0.2 spaces per seat. In all other cases, 10 spaces per 100m2 of total floor area.
Educational facility	For a primary school - 1.1 space per full time equivalent employee plus 0.25 spaces per student for a pickup/set down area either on-site or on the public realm within 300m of the site. For a secondary school - 1.1 per full time equivalent employee plus 0.1 spaces per student for a pickup/set down area either on-site or on the public realm within 300m of the site. For a tertiary institution - 0.4 per student based on the maximum number of students on the site at any time.
Place of worship	1 space for every 3 visitor seats.
Child care facility	For a child care centre, 0.25 spaces per child In all other cases, 1 per employee plus 0.25 per child (drop off/pick up bays).
Health Related Uses	
Consulting room	4 spaces per consulting room excluding ancillary facilities.
Hospital	4.5 spaces per bed for a public hospital. 1.5 spaces per bed for a private hospital.
Recreational and Entertainment Uses	
Cinema complex	0.2 spaces per seat.
Concert hall / theatre	0.2 spaces per seat.
Hotel	1 space for every 2m2 of total floor area in a public bar plus 1 space for every 6m2 of total floor area available to the public in a lounge, beer garden plus 1 space per 2 gaming machines, plus 1 space per 3 seats in a restaurant.
Indoor recreation facility	6.5 spaces per 100m2 of total floor area for a Fitness Centre 4.5 spaces per 100m2 of total floor area for all other indoor recreation facilities.
Industry/Employment Uses	
Fuel depot	1.5 spaces per 100m2 total floor area 1 spaces per 100m2 of outdoor area used for fuel depot activity purposes.
Industry	1.5 spaces per 100m2 of total floor area.
Store	0.5 spaces per 100m2 of total floor area.
Timber yard	1.5 spaces per 100m2 of total floor area 1 space per 100m2 of outdoor area used for display purposes.
Warehouse	0.5 spaces per 100m2 total floor area.
Other Uses	
Funeral Parlour	1 space per 5 seats in the chapel plus 1 space for each vehicle operated by the parlour.
Radio or Television Station	5 spaces per 100m2 of total building floor area.

Table 2 - Off-Street Car Parking Requirements in Designated Areas

The following parking rates apply in any zone, subzone or other area described in the 'Designated Areas' column.

Class of Development	Car Parking Rate Where a development comprises more than one development type, then the overall car parking rate will be taken to be the sum of the car parking rates for each development type.		Designated Areas
	Minimum number of spaces	Maximum number of spaces	
Development generally			
All classes of development	No minimum.	No maximum except in the Primary Pedestrian Area identified in the Primary Pedestrian Area Concept Plan, where the maximum is: 1 space for each dwelling with a total floor area less than 75 square metres 2 spaces for each dwelling with a total floor area between 75 square metres and 150 square metres 3 spaces for each dwelling with a total floor area greater than 150 square metres. Residential flat building or Residential component of a multi-storey building: 1 visitor space for each 6 dwellings.	Capital City Zone City Main Street Zone City Riverbank Zone Adelaide Park Lands Zone Business Neighbourhood Zone (within the City of Adelaide) The St Andrews Hospital Precinct Subzone and Women's and Children's Hospital Precinct Subzone of the Community Facilities Zone
Non-residential development			
Non-residential development excluding tourist	3 spaces per 100m2 of gross leasable floor area.	5 spaces per 100m2 of gross leasable floor area.	

accommodation			City Living Zone Urban Corridor (Boulevard) Zone Urban Corridor (Business) Zone Urban Corridor (Living) Zone Urban Corridor (Main Street) Zone Urban Neighbourhood Zone (except for Bowden)
Non-residential development excluding tourist accommodation	3 spaces per 100m2 of gross leasable floor area.	6 spaces per 100m2 of gross leasable floor area.	Strategic Innovation Zone in the City of Burnside, City of Marion or City of Mitcham Strategic Innovation Zone outside the City of Burnside, City of Marion or City of Mitcham when the site is also in a high frequency public transit area Suburban Activity Centre Zone when the site is also in a high frequency public transit area Suburban Business Zone when the site is also in a high frequency public transit area Business Neighbourhood Zone outside of the City of Adelaide when the site is also in a high frequency public transit area Suburban Main Street Zone when the site is also in a high frequency public transit area Urban Activity Centre Zone
Non-residential development excluding tourist accommodation	3 spaces per 100 square metres of gross leasable floor area 1.5 spaces per 100 square metres of gross leasable floor area above ground floor level other than for a shop	3 spaces per 100 square metres of gross leasable floor area	Urban Neighbourhood Zone in Bowden
Tourist accommodation	1 space for every 4 bedrooms up to 100 bedrooms plus 1 space for every 5 bedrooms over 100 bedrooms	1 space per 2 bedrooms up to 100 bedrooms and 1 space per 4 bedrooms over 100 bedrooms	City Living Zone Urban Activity Centre Zone when the site is also in a high frequency public transit area Urban Corridor (Boulevard) Zone Urban Corridor (Business) Zone Urban Corridor (Living) Zone Urban Corridor (Main Street) Zone Urban Neighbourhood Zone (except for Bowden)
Residential development			
Residential component of a multi-storey building	Dwelling with no separate bedroom -0.25 spaces per dwelling 1 bedroom dwelling - 0.75 spaces per dwelling 2 bedroom dwelling - 1 space per dwelling 3 or more bedroom dwelling - 1.25 spaces per dwelling 0.25 spaces per dwelling for visitor parking.	None specified.	City Living Zone Strategic Innovation Zone in the City of Burnside, City of Marion or City of Mitcham Strategic Innovation Zone outside the City of Burnside, City of Marion or City of Mitcham when the site is also in a high frequency public transit area Urban Activity Centre Zone when the site is also in a high frequency public transit area Urban Corridor (Boulevard) Zone Urban Corridor (Business) Zone Urban Corridor (Living) Zone Urban Corridor (Main Street) Zone Urban Neighbourhood Zone (except for Bowden)
Residential component of a multi-storey building	0.75 per dwelling	None specified	Urban Neighbourhood Zone in Bowden
Residential flat building	Dwelling with no separate bedroom -0.25 spaces per dwelling 1 bedroom dwelling - 0.75 spaces per dwelling	None specified.	City Living Zone

	2 bedroom dwelling - 1 space per dwelling 3 or more bedroom dwelling - 1.25 spaces per dwelling 0.25 spaces per dwelling for visitor parking.		Urban Activity Centre Zone when the site is also in a high frequency public transit area Urban Corridor (Boulevard) Zone Urban Corridor (Business) Zone Urban Corridor (Living) Zone Urban Corridor (Main Street) Zone Urban Neighbourhood Zone (except for Bowden)
Residential flat building	0.75 per dwelling	None specified	Urban Neighbourhood Zone in Bowden
Detached dwelling	0.75 per dwelling	None specified	Urban Neighbourhood Zone in Bowden
Row dwelling	0.75 per dwelling	None specified	Urban Neighbourhood Zone in Bowden
Semi-detached dwelling	0.75 per dwelling	None specified	Urban Neighbourhood Zone in Bowden

Table 3 - Off-Street Bicycle Parking Requirements

The bicycle parking rates apply within designated areas located within parts of the State identified in the Schedule to Table 3.

Class of Development	Bicycle Parking Rate Where a development comprises more than one development type, then the overall bicycle parking rate will be taken to be the sum of the bicycle parking rates for each development type.
Consulting room	1 space per 20 employees plus 1 space per 20 consulting rooms for customers.
Educational facility	For a secondary school - 1 space per 20 full-time time employees plus 10 percent of the total number of employee spaces for visitors. For tertiary education - 1 space per 20 employees plus 1 space per 10 full time students.
Hospital	1 space per 15 beds plus 1 space per 30 beds for visitors.
Indoor recreation facility	1 space per 4 employees plus 1 space per 200m2 of gross leasable floor area for visitors.
Licensed Premises	1 per 20 employees, plus 1 per 60 square metres total floor area, plus 1 per 40 square metres of bar floor area, plus 1 per 120 square metres lounge and beer garden floor area, plus 1 per 60 square metres dining floor area, plus 1 per 40 square metres gaming room floor area.
Office	1 space for every 200m2 of gross leasable floor area plus 2 spaces plus 1 space per 1000m2 of gross leasable floor area for visitors.
Child care facility	1 space per 20 full time employees plus 1 space per 40 full time children.
Recreation area	1 per 1500 spectator seats for employees plus 1 per 250 visitor and customers.
Residential flat building	Within the City of Adelaide 1 for every dwelling for residents with a total floor area less than 150 square metres, 2 for every dwelling for residents with a total floor area greater than 150 square metres, plus 1 for every 10 dwellings for visitors, and in all other cases 1 space for every 4 dwellings for residents plus 1 for every 10 dwellings for visitors.
Residential component of a multi-storey building	Within the City of Adelaide 1 for every dwelling for residents with a total floor area less than 150 square metres, 2 for every dwelling for residents with a total floor area greater than 150 square metres, plus 1 for every 10 dwellings for visitors, and in all other cases 1 space for every 4 dwellings for residents plus 1 space for every 10 dwellings for visitors.
Shop	1 space for every 300m2 of gross leasable floor area plus 1 space for every 600m2 of gross leasable floor area for customers.
Tourist accommodation	1 space for every 20 employees plus 2 for the first 40 rooms and 1 for every additional 40 rooms for visitors.
Schedule to Table 3	

Designated Area	Relevant part of the State The bicycle parking rate applies to a designated area located in a relevant part of the State described below.
All zones	City of Adelaide
Business Neighbourhood Zone Strategic Innovation Zone Suburban Activity Centre Zone Suburban Business Zone Suburban Main Street Zone Urban Activity Centre Zone Urban Corridor (Boulevard) Zone Urban Corridor (Business) Zone Urban Corridor (Living) Zone Urban Corridor (Main Street) Zone Urban Neighbourhood Zone	Metropolitan Adelaide

Waste Treatment and Management Facilities

Assessment Provisions (AP)

Desired Outcome (DO)

Desired Outcome	
DO 1	Mitigation of the potential environmental and amenity impacts of waste treatment and management facilities.

Performance Outcomes (PO) and Deemed-to-Satisfy (DTS) Criteria / Designated Performance Feature (DPF)

Performance Outcome	Deemed-to-Satisfy Criteria / Designated Performance Feature
Siting	
PO 1.1 Waste treatment and management facilities incorporate separation distances and attenuation measures within the site between waste operations areas (including all closed, operating and future cells) and sensitive receivers and sensitive environmental features to mitigate off-site impacts from noise, air and dust emissions.	DTS/DPF 1.1 None are applicable.
Soil and Water Protection	
PO 2.1 Soil, groundwater and surface water are protected from contamination from waste treatment and management facilities through measures such as: (a) containing potential groundwater and surface water contaminants within waste operations areas (b) diverting clean stormwater away from waste operations areas and potentially contaminated areas (c) providing a leachate barrier between waste operations areas and underlying soil and groundwater.	DTS/DPF 2.1 None are applicable.
PO 2.2 Wastewater lagoons are set back from watercourses to minimise environmental harm and adverse effects on water resources.	DTS/DPF 2.2 Wastewater lagoons are set back 50m or more from watercourse banks.
PO 2.3 Wastewater lagoons are designed and sited to: (a) avoid intersecting underground waters; (b) avoid inundation by flood waters; (c) ensure lagoon contents do not overflow; (d) include a liner designed to prevent leakage.	DTS/DPF 2.3 None are applicable.
PO 2.4 Waste operations areas of landfills and organic waste processing facilities are set back from watercourses to minimise adverse impacts on water resources.	DTS/DPF 2.4 Waste operations areas are set back 100m or more from watercourse banks.
Amenity	
PO 3.1 Waste treatment and management facilities are screened, located and designed to minimise adverse visual impacts on amenity.	DTS/DPF 3.1 None are applicable.
PO 3.2 Access routes to waste treatment and management facilities via residential streets is avoided.	DTS/DPF 3.2 None are applicable.
PO 3.3 Litter control measures minimise the incidence of windblown litter.	DTS/DPF 3.3 None are applicable.
PO 3.4 Waste treatment and management facilities are designed to minimise adverse impacts on both the site and surrounding areas from weed and vermin infestation.	DTS/DPF 3.4 None are applicable.
Access	

Policy24	P&D Code (in effect) - Version 2023.13 - 31/08/2023
PO 4.1 Traffic circulation movements within any waste treatment or management site are designed to enable vehicles to enter and exit the site in a forward direction.	**DTS/DPF 4.1** None are applicable.
PO 4.2 Suitable access for emergency vehicles is provided to and within waste treatment or management sites.	**DTS/DPF 4.2** None are applicable.
Fencing and Security	
PO 5.1 Security fencing provided around waste treatment and management facilities prevents unauthorised access to operations and potential hazard to the public.	**DTS/DPF 5.1** Chain wire mesh or pre-coated painted metal fencing 2m or more in height is erected along the perimeter of the waste treatment or waste management facility site.
Landfill	
PO 6.1 Landfill gas emissions are managed in an environmentally acceptable manner.	**DTS/DPF 6.1** None are applicable.
PO 6.2 Landfill facilities are separated from areas of environmental significance and land used for public recreation and enjoyment.	**DTS/DPF 6.2** Landfill facilities are set back 250m or more from a public open space reserve, forest reserve, national park or Conservation Zone.
PO 6.3 Landfill facilities are located on land that is not subject to land slip.	**DTS/DPF 6.3** None are applicable.
PO 6.4 Landfill facilities are separated from areas subject to flooding.	**DTS/DPF 6.4** Landfill facilities are set back 500m or more from land inundated in a 1% AEP flood event.
Organic Waste Processing Facilities	
PO 7.1 Organic waste processing facilities are separated from the coast to avoid potential environment harm.	**DTS/DPF 7.1** Organic waste processing facilities are set back 500m or more from the coastal high water mark.
PO 7.2 Organic waste processing facilities are located on land where the engineered liner and underlying seasonal water table cannot intersect.	**DTS/DPF 7.2** None are applicable.
PO 7.3 Organic waste processing facilities are sited away from areas of environmental significance and land used for public recreation and enjoyment.	**DTS/DPF 7.3** Organic waste processing facilities are set back 250m or more from a public open space reserve, forest reserve, national park or a Conservation Zone.
PO 7.4 Organic waste processing facilities are located on land that is not subject to land slip.	**DTS/DPF 7.4** None are applicable.
PO 7.5 Organic waste processing facilities separated from areas subject to flooding.	**DTS/DPF 7.5** Organic waste processing facilities are set back 500m or more from land inundated in a 1% AEP flood event.
Major Wastewater Treatment Facilities	
PO 8.1 Major wastewater treatment and disposal systems, including lagoons, are designed to minimise potential adverse odour impacts on sensitive receivers, minimise public and environmental health risks and protect water quality.	**DTS/DPF 8.1** None are applicable.
PO 8.2 Artificial wetland systems for the storage of treated wastewater are designed and sited to minimise potential public health risks arising from the breeding of mosquitoes.	**DTS/DPF 8.2** None are applicable.

Workers' accommodation and Settlements

Assessment Provisions (AP)

Desired Outcome (DO)

Desired Outcome	
DO 1	Appropriately designed and located accommodation for seasonal and short-term workers in rural areas that minimises environmental and social impacts.

Performance Outcomes (PO) and Deemed-to-Satisfy (DTS) Criteria / Designated Performance Feature (DPF)

Performance Outcome	Deemed-to-Satisfy Criteria / Designated Performance Feature
PO 1.1 Workers' accommodation and settlements are obscured from scenic routes, tourist destinations and areas of conservation significance or otherwise designed to complement the surrounding landscape.	DTS/DPF 1.1 None are applicable.
PO 1.2 Workers' accommodation and settlements are sited and designed to minimise nuisance impacts on the amenity of adjacent users of land.	DTS/DPF 1.2 None are applicable.
PO 1.3 Workers' accommodation and settlements are built with materials and colours that blend with the landscape.	DTS/DPF 1.3 None are applicable.
PO 1.4 Workers' accommodation and settlements are supplied with service infrastructure such as power, water and effluent disposal sufficient to satisfy the living requirements of workers.	DTS/DPF 1.4 None are applicable.

Admin - No criteria applies to this land use

No criteria applies to this land use. Please check the definition of the land use for further detail.

10 MATTERS DEFERRED

Development Application 23006470 – Lot 9 Curly Hollow Road, White Hut

11 REVIEW OF DECISION OF ASSESSMENT MANAGER

Nil

12 ERD COURT MATTERS

Nil

13 CONCURRENCE APPROVALS

14 PROCEDURAL MATTERS

Nil

15 NEXT MEETING

To be advised.

16 CLOSURE